TECO

New Global SERIES

Totally Enclosed Fan Cooled

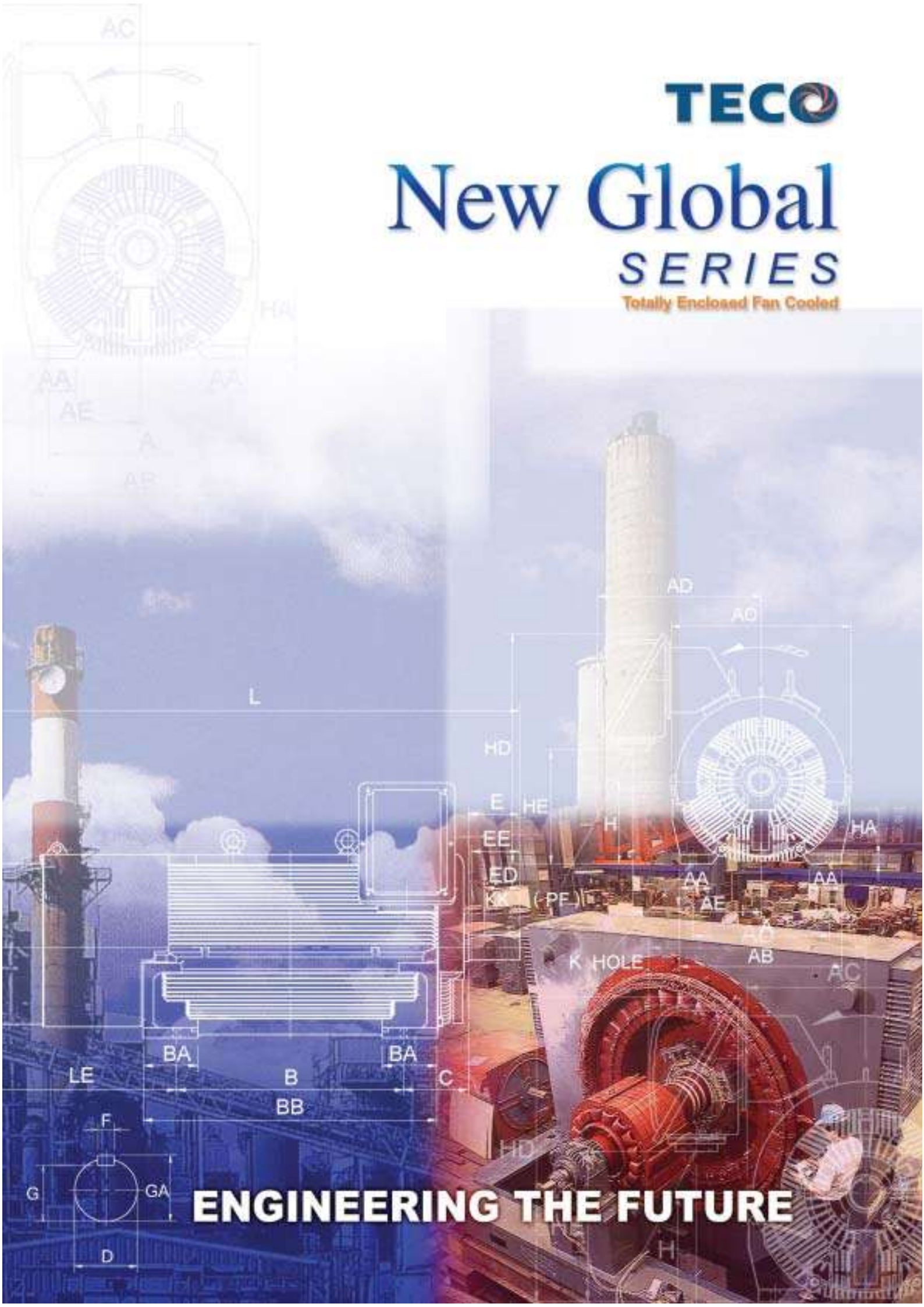

ENGINEERING THE FUTURE

NEW GLOBAL SERIES

FEATURES:

◆Frame size reduction

Reduce the frame size and improve the efficiency at the same time to meet the market demand.

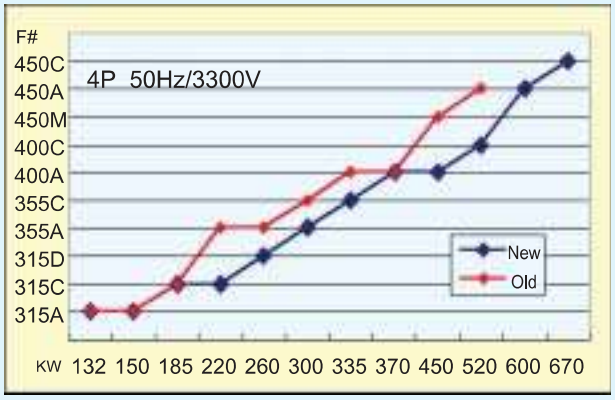

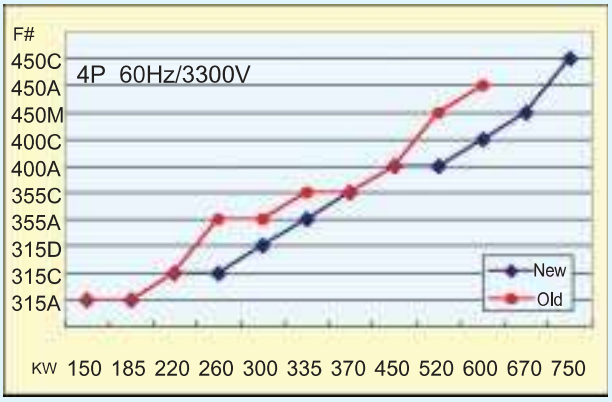

◆Premium efficiency

The efficiency level have been substantially improved for greater savings.

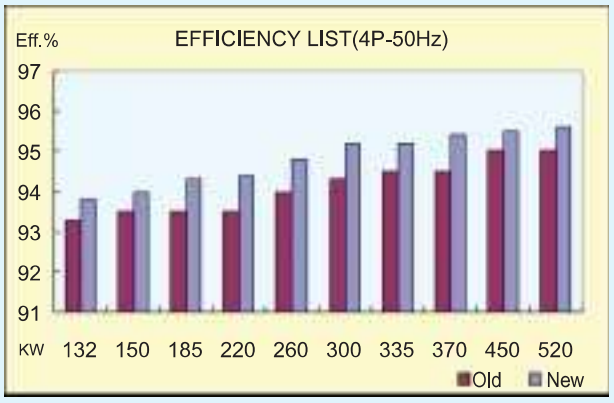

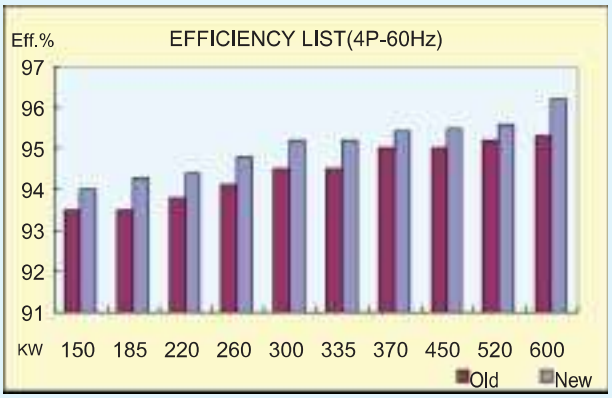

◆Low noise

Reduce the noise level 4~9dBA compared to traditional standard motors.
(The noise level is based on test at no-load and 1 M distance)

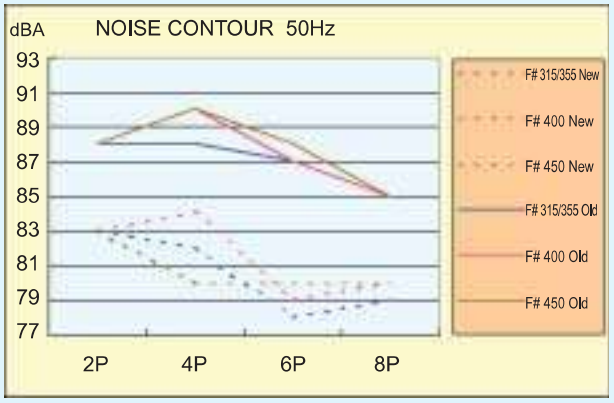

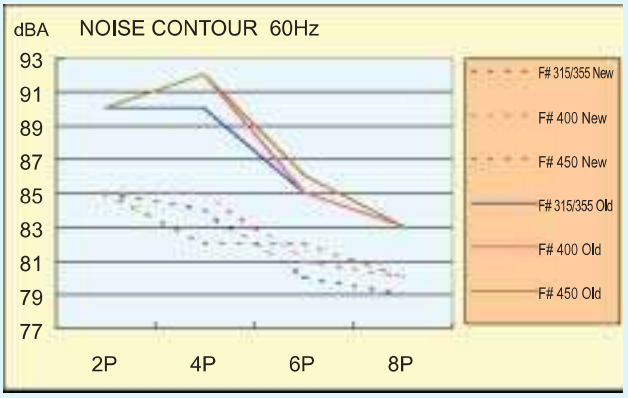

BASIC SPECIFICATIONS

	ITEM		STANDARD SPECIFCATION
RATING	KIND OF MOTOR		SQUIRREL-CAGE INDUCTION MOTOR (SCIM)
	DESIGN STANDARD		IEC 34 , BS 4999 , BS 5000 , CNS
	VOLTAGE		MEDIUM VOLTAGE: 2300V, 3000V, 3300V, 4160V, 6000V, 6600V LOW VOLTAGE: 60Hz: 380V, 440V, 460V 50Hz: 380V, 415V
	FREQUENCY		50Hz OR 60Hz
	OUTPUT RANGE		MEDIUM VOLTAGE: 125HP ~ 2000HP (90kw ~ 1500kw) LOW VOLTAGE: 150HP ~ 900HP (110kw ~ 670kw)
	R.P.M. (SYN.)		60Hz: 3600 ~ 900 R.P.M.(2 ~ 8 POLE) 50Hz: 3000 ~ 750 R.P.M.(2 ~ 8 POLE)
	TIME DUTY		CONTINUOUS S.F. 1.0 (S1, MCR)
	FRAME NO.		315A ~ 560C (MEDIUM VOLTAGE). 315A ~ 450A (LOW VOLTAGE).
	PROTECTION ENCLOSURE		TOTALLY ENCLOSED (IP 54)
	COOLING METHOD		SELF EXTERNAL FAN,SURFACE COOLING(IC 411)
	MOUNTING		HORIZONTAL FOOT MOUNTING (IM 1001,B3)
APPLICATION	AMBIENT CONDITION	PLACE	SHADOW, NON-HAZARDOUS
		TEMPERATURE	-20℃ ~ 40℃
		HUMIDITY	RELATIVE HUMIDITY:LESS THAN 95% RH (NON-CONDENSATION)
		ALTITUDE	LESS THAN 1000 METERS
	DRIVE METHOD		DIRECT COUPLING
	DIRECTION OF ROTATION		BI-DIRECTIONAL, EXCEPT 2 POLE WHICH IS COUNTER-CLOCKWISE FACING THE DRIVE END
	METHOD OF STARTING		MEDIUM VOLTAGE: DIRECT-ON LINE(D.O.L.), OR REDUCED- VOLTAGE STARTING LOW VOLTAGE: D.O.L. OR STAR-DELTA OR REDUCED-VOLTAGE STARTING
CONSTRUCTION	BEARING		BRACKET MOUNTING, VACUUM DE-GASSED HIGH QUALITY ROLLING BEARING WITH REGREASE PROVISIONS
	TERMINAL BOX		CAST IRON, LARGE SIZE, CAN BE ROTATED EACH 90° STEP, WITH CONDUIT HOLE COVERED WITH PLATE FOR CABLE ENTRANCE, AT LEFT HAND SIDE FACING DRIVE END IS STANDARD
	LEAD TERMINAL		MEDIUM VOLTAGE: 3 OR 6 LEADS, WITH SOLDERLESS LUG TERMINALS LOW VOLTAGE: 6 LEADS, WITH SOLDERLESS LUG TERMINALS
	STATOR INSULATION		CLASS F INSULATION SYSTEM
	PAINTING		MODIFIED PHENOL RESIN WITH IRON OXIDE RUST PROOF BASE, PLUS ALKYD SURFACE FINISH PAINTING IN BLUE-GRAY COLOR (MUNSELL 7.5BG 4/2)
	BOLT THREAD		ISO METRIC SYSTEM
PERFORMANCE	TEST PROCEDURE		IEC 34, BS 4999, AS1359
	TEMPERATURE RISE		NOT TO EXCEED 80℃ BY RESISTANCE METHOD
	OVER SPEED		120% SYN. R.P.M. FOR TWO MIN.
	OVER TORQUE		160% RATED TORQUE FOR 15 SEC.

TEFC - MEDIUM VOLTAGE

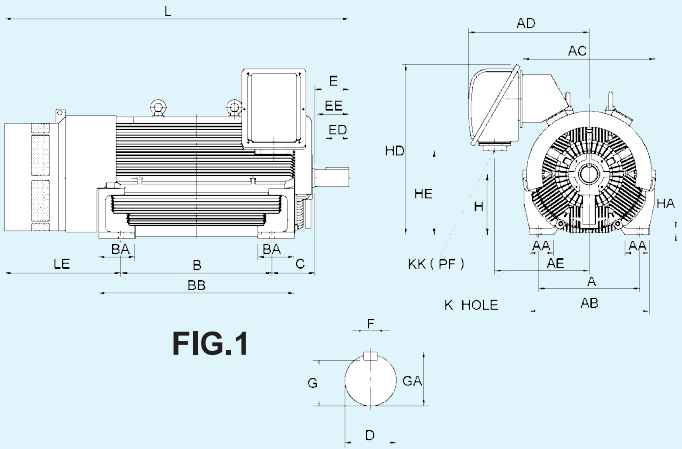

FIG.1

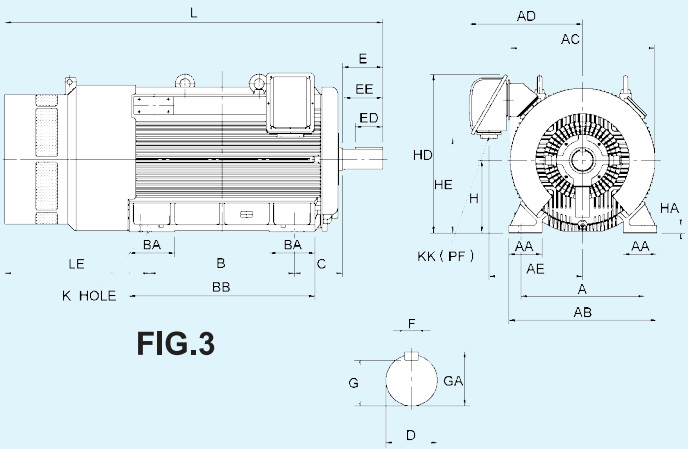

FIG.3

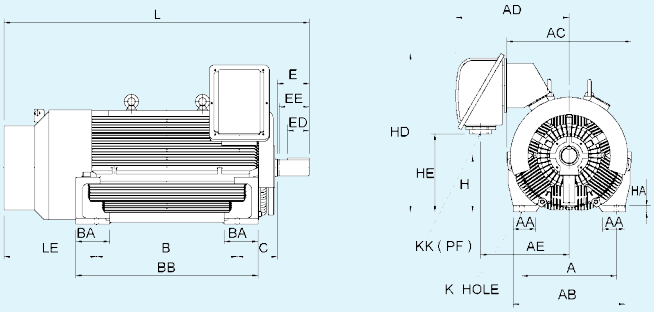

FIG.2

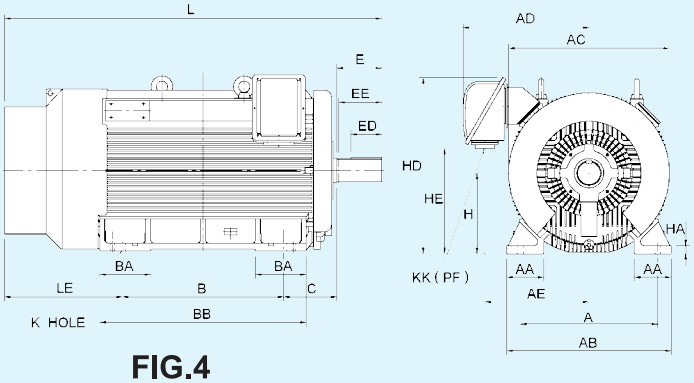

FIG.4

Frame No.	No. of Poles	Fig.	Mounting								AC	AD	AE	H	HA	HD
			A	AA	AB	B	BA	BB	C	K						
315A	2P	1	508	150	650	560	180	730	216	28	730	666	511	315	45	874
315A	4P	2	508	150	650	560	180	730	216	28	730	666	511	315	45	874
315A	6P&8P	2	508	150	650	560	180	730	216	28	730	666	511	315	45	874
315C	2P	1	508	150	650	710	180	880	216	28	730	666	511	315	45	874
315C	4P	2	508	150	650	710	180	880	216	28	730	666	511	315	45	874
315C	6P&8P	2	508	150	650	710	180	880	216	28	730	666	511	315	45	874
315D	2P	1	508	150	650	910	180	1080	216	28	730	666	511	315	45	874
315D	4P	2	508	150	650	910	180	1080	216	28	730	666	511	315	45	874
315D	6P&8P	2	508	150	650	910	180	1080	216	28	730	666	511	315	45	874
355A	4P	2	610	150	750	710	210	930	254	28	810	762	607	355	45	997
355A	6P&8P	2	610	150	750	710	210	930	254	28	810	762	607	355	45	997
355C	2P	1	610	150	750	900	210	1120	254	28	810	762	607	355	45	997
355C	4P	2	610	150	750	900	210	1120	254	28	810	762	607	355	45	997
355C	6P&8P	2	610	150	750	900	210	1120	254	28	810	762	607	355	45	997
400A	4P	2	686	150	810	800	245	1060	280	35	860	774	619	400	40	1062
400A	6P&8P	2	686	150	810	800	245	1060	280	35	860	774	619	400	40	1062
400C	2P	1	686	150	810	1000	245	1260	280	35	860	774	619	400	40	1062
400C	4P	2	686	150	810	1000	245	1260	280	35	860	774	619	400	40	1062
400C	6P&8P	2	686	150	810	1000	245	1260	280	35	860	774	619	400	40	1062
450A	4P	1	750	180	890	900	270	1230	315	35	986	807	652	450	50	1170
450A	6P&8P	2	750	180	890	900	270	1230	315	35	986	807	652	450	50	1170
450C	2P	1	750	180	890	1120	270	1450	315	35	986	807	652	450	50	1170
450C	4P	1	750	180	890	1120	270	1450	315	35	986	807	652	450	50	1170
450C	6P&8P	2	750	180	890	1120	270	1450	315	35	986	807	652	450	50	1170
500C	4P	3	850	230	1020	1250	315	1530	335	35	996	822	667	500	50	1123
500C	6P&8P	4	850	230	1020	1250	315	1530	335	35	996	822	667	500	50	1123
560C	4P	5	950	250	1120	1400	315	1720	355	42	1090	857	702	560	50	1218
560C	6P&8P	6	950	250	1120	1400	315	1720	355	42	1090	857	702	560	50	1218

Dimensions in mm

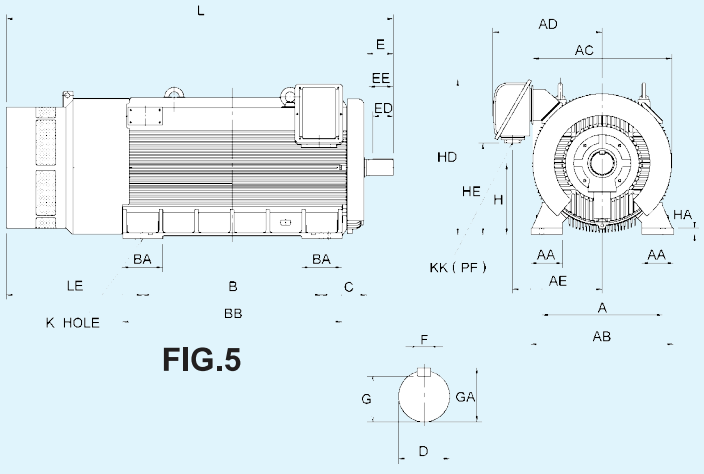

FIG.5

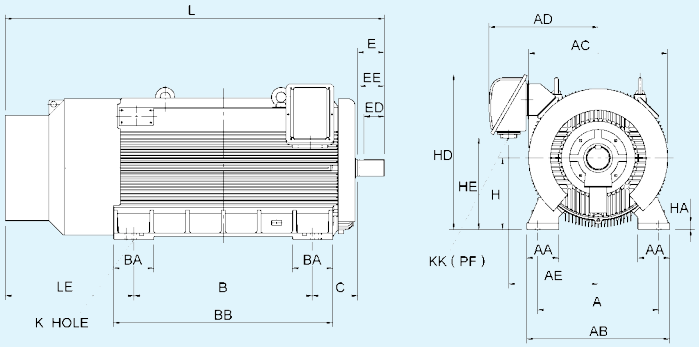

FIG.6

NOTES

1. Tolerance of shaf extension diameter D = m6
2. Tolerance of shaft center height H = +0, -1
3. For direct flexible coupling
4. Usable shaft length: EE

HE	KK	L	LE	Shaft Extension				Key Size			Bearing		Frame No.
				D	E	EE	G	ED	F	GA	DRIVE END	OPP DRIVE END	
470	4"	1516	600	70	140	134	62.5	110	20	74.5	6315C3	6315C3	315A
470	4"	1496	550	95	170	157	86	140	25	100	6320	6320	315A
470	4"	1456	510	95	170	157	86	140	25	100	6320	6320	315A
470	4"	1666	600	70	140	134	62.5	110	20	74.5	6315C3	6315C3	315C
470	4"	1646	550	95	170	157	86	110	25	100	6320	6320	315C
470	4"	1606	510	95	170	157	86	140	25	100	6320	6320	315C
470	4"	1866	600	70	140	134	62.5	110	20	74.5	6315C3	6315C3	315D
470	4"	1846	550	95	170	157	86	140	25	100	6320	6320	315D
470	4"	1806	510	95	170	157	86	140	25	100	6320	6320	315D
497	5"	1749	615	95	170	157	86	140	25	100	6322	6320	355A
497	5"	1749	615	95	170	157	86	140	25	100	6322	6320	355A
497	5"	1939	645	70	140	134	62.5	110	20	74.5	6315C3	6315C3	355C
497	5"	1939	615	95	170	157	86	140	25	100	6322	6320	355C
497	5"	1939	615	95	170	157	86	140	25	100	6322	6320	355C
562	5"	1925	635	110	210	197	100	160	28	116	6324	6320	400A
562	5"	1925	635	110	210	197	100	160	28	116	6324	6320	400A
562	5"	2145	725	70	140	134	62.5	110	20	74.5	6315C3	6315C3	400C
562	5"	2125	635	110	210	197	100	160	28	116	6324	6320	400C
562	5"	2125	635	110	210	197	100	160	28	116	6324	6320	400C
670	5"	2205	780	110	210	197	100	160	28	116	6324	6322	450A
670	5"	2135	710	110	210	197	100	160	28	116	6324	6322	450A
670	5"	2335	760	70	140	134	62.5	110	20	74.5	6315C3	6315C3	450C
670	5"	2425	780	110	210	197	100	160	28	116	6324	6322	450C
670	5"	2355	710	110	210	197	100	160	28	116	6324	6322	450C
623	5"	2610	815	125	210	197	114	160	32	132	6326	6324M/C3,VLO24	500C
623	5"	2560	765	125	210	197	114	160	32	132	6326	6324M/C3,VLO24	500C
718	5"	2885	880	140	250	237	128	200	36	148	6330	6326M/C3,VLO24	560C
718	5"	2855	850	140	250	237	128	200	36	148	6330	6326M/C3,VLO24	560C

TEFC - LOW VOLTAGE

FIG.1

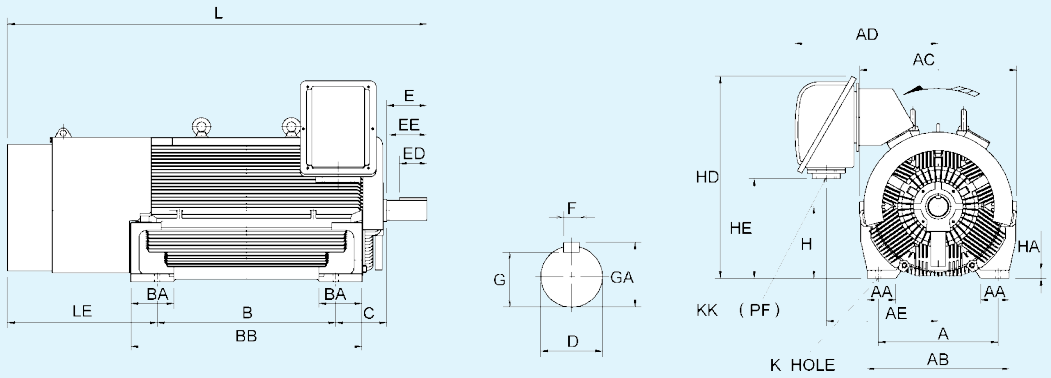

FIG.2

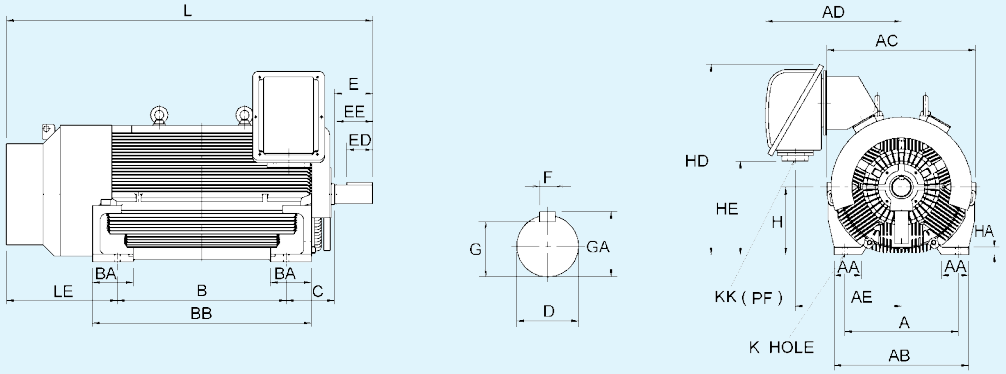

Frame No.	No. of Poles	Fig.	Mounting								AC	AD	AE	H	HA	HD
			A	AA	AB	B	BA	BB	C	K						
315A	2P	1	508	150	650	560	180	730	216	28	730	666	511	315	45	874
315A	4P.6P.8P	2	508	150	650	560	180	730	216	28	730	666	511	315	45	874
315C	2P	1	508	150	650	710	180	880	216	28	730	666	511	315	45	874
315C	4P.6P.8P	2	508	150	650	710	180	880	216	28	730	666	511	315	45	874
315D	2P	1	508	150	650	910	180	1080	216	28	730	666	511	315	45	874
315D	4P.6P.8P	2	508	150	650	910	180	1080	216	28	730	666	511	315	45	874
355A	2P	1	610	150	750	710	210	930	254	28	810	762	607	355	45	997
355A	4P.6P.8P	2	610	150	750	710	210	930	254	28	810	762	607	355	45	997
355C	4P.6P.8P	2	610	150	750	900	210	1120	254	28	810	762	607	355	45	997
400A	4P.6P.8P	2	686	150	810	800	245	1060	280	35	860	774	619	400	40	1062
400C	2P	1	686	150	810	1000	245	1260	280	35	860	774	619	400	40	1062
400C	4P.6P.8P	2	686	150	810	1000	245	1260	280	35	860	774	619	400	40	1062
450A	2P	1	750	180	890	900	270	1230	315	35	986	807	652	450	50	1170
450A	4P	3	750	180	890	900	270	1230	315	35	986	807	652	450	50	1170
450A	6P&8P	2	750	180	890	900	270	1230	315	35	986	807	652	450	50	1170

Dimensions in mm

FIG.3

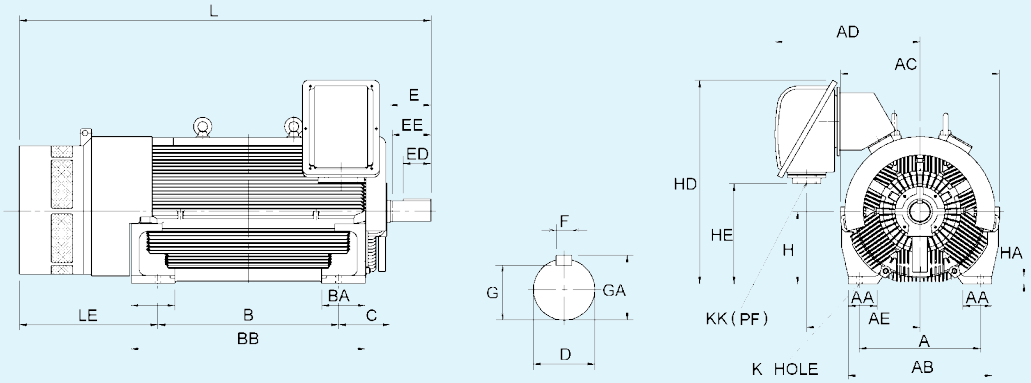

NOTES

1. Tolerance of shaf extension diameter D = m6
2. Tolerance of shaft center height H = +0, -1
3. For direct flexible coupling
4. Usable shaft length: EE

HE	KK	L	LE	Shaft Extension				Key Size			Bearing		Frame No.
				D	E	EE	G	ED	F	GA	DRIVE END	OPP DRIVE END	
469	4"	1601	685	70	140	134	62.5	110	20	74.5	6315C3	6315C3	315A
469	4"	1496	550	95	170	157	86	140	25	100	6320	6320	315A
469	4"	1751	685	70	140	134	62.5	110	20	74.5	6315C3	6315C3	315C
469	4"	1646	550	95	170	157	86	140	25	100	6320	6320	315C
469	4"	1951	685	70	140	134	62.5	110	20	74.5	6315C3	6315C3	315D
469	4"	1846	550	95	170	157	86	140	25	100	6320	6320	315D
504	5"	1854	750	70	140	134	62.5	110	25	74.5	6315C3	6315C3	355A
504	5"	1749	615	95	170	157	86	140	25	100	6322	6320	355A
504	5"	1939	615	95	170	157	86	140	25	100	6322	6320	355C
569	5"	1925	635	110	210	197	100	160	28	116	6324	6320	400A
569	5"	2200	780	70	140	134	62.5	110	20	74.5	6315C3	6315C3	400C
569	5"	2125	635	110	210	197	100	160	28	116	6324	6320	400C
677	5"	2240	885	70	140	134	62.5	110	20	74.5	6315C3	6315C3	450A
677	5"	2205	780	110	210	197	100	160	28	116	6324	6322	450A
677	5"	2135	710	110	210	197	100	160	28	116	6324	6322	450A

Head Office
Teco Electric & Machinery Co. Ltd
10F No, 3-1, Yuan Cyu St.
Nan-Kang Taipei 115
Taiwan ROC
Tel: +886 2 6615 9111
www.teco.com.tw

UNITED STATES
Teco-Westinghouse Motor Company
PO Box 227 (78680-0277)
5100 N.IH35
Round Rock Texas 78681 USA
Tel: +1 512 255 4141
+1 800 873 8326
www.tecowestinghouse.com

CANADA
Teco-Westinghouse
Motors Inc. (Canada)
18060-109th Ave
Edmonton, Alberta T5S 2K2 Canada
Tel: +1 780 444 8933
Fax: (780) 486-4575
24 HR Emergency Pager:
(780) 419 7734
Toll Free: 800-661-4023
Fax Toll Free: 888-USE-TWMI
www.twmi.com

UNITED KINGDOM
Teco Electric Europe Ltd.
26 Bond,Europa Way
Old Trafford, Manchester
M17 1WF England
Tel: +44 161 877 8025
www.teco.co.uk

NETHERLANDS
Teco Electric & Machinery B.V.
Teco's European Head Office
Rivium 3e Straat 27
2909 LH Capelle a/d IJssel
The Netherlands
Tel: +31 10 266 6633
Fax: +31 10 202 6415

GERMANY
Teco Electric & Machinery B.V.
Niederlassung Deutschland
Marktstrasse 69
37441 Bad Sachsa
Germany
Tel: +49 5523 95340
Fax: +49 5523 953424
www.teco-westinghouse.de

SPAIN
Teco Electric & Machinary B.V.
Spain Office
C/Sancho Dávila, 8, 1D
28028 Madrid Spain
Tel: +34 91 725 1718
E: info@tecowestinghouse.es

SAUDI ARABIA
Al Quraishi Electrical Services of S.A.
Al Quraishi Center, King Khalid Street,
P.O.Box 7386, Dammam-31462
Tel: +966 3 835 1155
Fax: +966 3 835 2297
www.aqesa.com

SOUTH AFRICA
ArmCoil Afrika (Pty) Ltd.
Unit 3 Prestige Park 127 Main Reef Road
Technikon Roodepoort
PO Box 500 Maraisburg 1700
Gauteng South Africa
Tel: +2711 763 2351
Fax: 0866 318 588
www.armcoil.co.za

AUSTRALIA
Teco Australia Pty Ltd.
335-337 Woodpark Road
Smithfield NSW 2164 Australia
Tel: +61 2 9765 8118
www.teco.com.au

NEW ZEALAND
Teco New Zealand Pty Ltd.
Unit 3 477 Great South Road
Penrose Auckland New Zealand
Tel: +64 9 526 8480

JAPAN
Sankyo Co., Ltd.
26th fl. World Trading Center Bldg.
2-4-1 Hamamatsucho Minato-ku
Tokyo Japan 105-6126
Tel: +81 3 3435 9729
Fax: +81 3 3578 8381

SINGAPORE
Teco Electric & Machinery (PTE) Ltd.
18 Chin Bee Drive
Singapore 619865
Tel: +65 6 265 4622
www.teco.com.sg

INDONESIA
P.T. Teco Multiguna Elektro
JL Bandengan Utara No. 83/1-3
Jakarta Utara-14400 Indonesia
Tel: +62 21 662 2201

VIETNAM
TECO(Vietnam)Electric & Machinery Co., Ltd.
KCN LONG Thanh, Huyen Long Thanh,
Tinh Dong Nai. Vietnam

https://maybomteco.vn/
HP: 0352183679

CHINA
Shanghai Office
Rm 321 Building No.6
Lane 1279 Zhongshan W. Rd.
Shanghai. PRC
Tel: +86 21 5116 8255
Fax: +86 21 6278 8761

Wuxi Teco Electric & Machinery Co., Ltd.
No. 9 South Of Changjiang Road,
New Zone, Wuxi,
Jiangsu Province, PRC
Tel: +86 510 8534 2005
Fax: +86 510 8534 2001
www.wuxiteco.com

Jiangxi Teco Electric & Machinery Co., Ltd
189 Dongyuan Rd. Hi-Tech Zone,
Nanchang Jiangxi, china
Tel: +86 791 819 5999
Fax: +86 791 816 7730

Suzhou Teco Electric &
Machinery Co., Ltd
No. 1 Changjiang W.Rd. Liuhe
Taicang City, Suzhou,
Jiangsu Province, PRC
Tel: +86 512 5361 9901
Fax: +86 512 5396 1058

HONG KONG
Tecoson Industrial Development
(HK) Co., Ltd.
Rm 3712 Hong Kong Plaza
186-191 Connaught Rd. West
Hong Kong
Tel: +852 2858 3220

MALAYSIA
STE Marketing SDN BHD
6 Jalan Firma 2 Kawasan Perind. Tebrau 1
81100 Johor Bahru Johor Malaysia
Tel: +60 7 354 8008

THAILAND
Teco Electric & Machinery
(Thai) Co., Ltd.
128/1 Soi Watsrivareenoi
Moo 7 Bangna-Trad Road Km 18
Bangchalong Bangplee
Samuthprakarn 10540 Thailand
Tel: +662 3371311- 20

MAR. '08/TA-5501