TECO

AEHM· AEUM SERIES IE2

High Efficiency Cast Iron Motors

TECO
GO ECO

TECO MOTORS ROTATE THE WORLD

SPECIFICATION TABLE

ITEM		STANDARD SPECIFICATION
RATING	Kind of Motors	Squirrel-Cage Induction Motors (SCIM)
	Design Standards	JIS C4212 , IEC 60034 , CNS 14400.
	Voltages	200V , 220V , 230V ,380V , 460V or others
	Frequency	50Hz or 60Hz
	Output Range	0.2kW ~ 200kW (1/4 HP ~ 270HP).
	R.P.M.(Syn.)	3000 ~ 1000 R.P.M.(2~6Poles) 50Hz. 3600 ~ 1200 R.P.M.(2~6Poles) 60Hz.
	Time Duty	Continuous. S1, S.F. : 1.15 at 60Hz (S.F. : 1.0 at 50 Hz).
	Frame Nos.	63~315 M.
	Protection Enclosure	Totally Enclosed (IP 54).
	Cooling Method	Self External Fan, Surface Cooling (IC 411).
	Mounting	Horizontal Foot Mounting B3 (IM 1001). Flange Mounting V1 (IM 3011).
APPLICATION	Environment Conditions	Place : Shandow , Non-Hazardous , Ambient Temperature : -15℃ ~ 40℃. Relative Humidity : Less Than 90%RH (Non-Condensation). Altitude : Less Than 1,000M.
	Drive Method	Belt Service , However , 2 Poles 22kW and Up Coupling Service is the Way.
	Direction of Rotation	Bi - Directional.
	Method of Starting	Full Voltage Direct On Line or ⅄ - △ Starting.
CONSTRUCTION	Bearing	Bracket Mounting , Vacuum De – Gassed High Quality Open Bearings For Frame Nos. 250~315 , Grease Pre-Packed Shielded Rolling Bearings for the Others.
	Terminal Box	Frame 250 Below Pressed Steel, Frame 280~315 Cast Iron, Larger Size , Can be Set 90° Apart with Clearance Hole Cable Entrance at Left Side View form the Drive End.
	Stator Winding	Pre – Formed , Random Wound , Made of Heavy , Polyester Enameled Copper Wire.
	Stator Insulation	Class F Insulation System .
	Painting	Phenolic Rust Proof Base Plus Lacquer Surface Finished Painting in Mazarine (Munsell 5PB 3/8)
PERFORMANCE	Test Procedure	JIS C4212、IEEE-112 Method B and Full Voltage Measuring Starting Performance.
	Temperature Rise	Frame No. Up to 180M : Not to Exceed 80℃ . Frame No. 180L and above : Not to Exceed 100℃ Resistance Method at S.F. 1.0.
	Over Speed	120% Syn. R.P.M. for 2 Minutes.
	Over Torque	160% Rated Torque for 15 Sec.

PERFORMANCE DATA AEHM / AEUM

TEFC, CLASS F INSULATION 40°C AMBIENT TEMP.S.F. :1.0 at 50HZ (S.F.1.15 at 60HZ) (200/220V)

OUTPUT		Pole	Volt	Hz	Frame No.		EFFICIENCY			POWER FACTOR			CURRENT		TORQUE				
HP	kW					FULL LOAD PPM	FULL LOAD (%)	3/4 LOAD (%)	1/2 LOAD (%)	FULL LOAD (%)	3/4 LOAD (%)	1/2 LOAD (%)	FULL LOAD (A)	LOCKED ROTOR (A)	FULL LOAD kg-m	LOCKED ROTOR %FLT	PULL UP %FLT	BREAK DOWN %FLT	ROTOR GD^2 $kg\text{-}m^2$
1/4	0.2	2	200	50	63	2750	72.0	71.5	66.5	82.0	74.5	62.5	0.98	6.50	0.071	370	370	350	0.002
			200	60		3270	72.0	73.0	70.0	85.5	79.5	69.0	0.94	5.50	0.060	330	330	320	
			220	60		3360	72.0	71.5	67.0	82.0	75.0	63.5	0.89	6.00	0.058	410	410	400	
		4	200	50	63	1345	72.0	71.0	68.5	71.5	62.0	48.0	1.12	6.50	0.145	250	240	250	0.003
			200	60		1610	74.0	75.0	72.5	74.5	66.0	52.5	1.05	5.50	0.121	220	220	220	
			220	60		1660	74.0	74.5	70.5	68.5	59.0	46.0	1.04	6.00	0.117	280	270	280	
1/2	0.4	2	200	50	71	2765	78.5	79.5	77.5	88.5	83.5	72.5	1.66	13.0	0.141	270	240	250	0.002
			200	60		3305	77.0	79.0	78.0	90.5	87.0	78.5	1.66	11.0	0.118	240	200	230	
			220	60		3380	78.5	79.5	77.0	88.5	83.5	73.5	1.51	12.0	0.115	300	250	280	
		4	200	50	71	1380	76.0	76.0	73.5	73.0	64.5	51.0	2.08	13.0	0.282	260	230	250	0.006
			200	60		1655	77.0	78.0	76.5	76.5	69.0	57.0	1.96	11.0	0.235	230	210	230	
			220	60		1685	78.5	78.5	75.5	72.0	63.5	50.5	1.86	12.0	0.231	290	260	280	
		6	200	50	80	910	73.0	73.0	70.5	74.0	64.0	50.0	2.14	13.0	0.428	220	200	230	0.013
			200	60		1095	72.0	74.0	72.0	74.0	65.0	52.0	2.17	11.0	0.355	190	180	200	
			220	60		1125	76.0	75.0	71.5	69.0	60.0	47.0	2.00	12.0	0.346	230	220	250	
1	0.75	2	200	50	80	2805	77.5	79.0	77.0	86.5	81.0	69.0	3.21	21.0	0.259	260	210	280	0.005
			200	60		3330	75.5	77.5	76.0	89.5	86.0	76.5	3.19	17.0	0.218	230	230	250	
			220	60		3410	78.5	79.5	76.5	86.0	81.0	69.5	2.90	19.0	0.213	280	280	310	
		4	200	50	80	1425	80.5	80.5	78.0	74.5	65.5	51.5	3.59	25.0	0.509	330	320	350	0.011
			200	60		1700	81.5	82.5	81.5	79.5	72.0	59.0	3.32	23.0	0.427	290	280	310	
			220	60		1725	82.5	83.0	80.0	73.5	65.0	51.5	3.23	25.0	0.421	350	350	380	
		6	200	50	90L	950	78.5	78.5	75.5	66.5	57.0	44.5	4.13	21.0	0.764	260	240	280	0.022
			200	60		1140	80.0	81.0	79.5	72.5	65.0	53.0	3.71	23.0	0.637	210	180	240	
			220	60		1155	80.0	80.5	77.5	66.5	58.0	45.5	3.68	25.0	0.628	260	220	300	
2	1.5	2	200	50	90L	2870	83.0	83.0	81.0	81.0	73.5	60.5	6.41	50.0	0.506	330	330	380	0.010
			200	60		3440	82.5	84.0	82.0	87.5	83.0	73.5	5.97	45.0	0.422	280	280	320	
			220	60		3470	84.0	84.5	81.5	82.5	76.5	64.5	5.65	50.0	0.418	350	350	400	
		4	200	50	90L	1430	83.0	83.5	81.5	78.0	70.0	57.0	6.65	45.0	1.015	240	230	300	0.020
			200	60		1720	84.0	85.0	84.5	84.0	79.0	68.5	6.10	41.0	0.844	200	190	270	
			220	60		1735	84.0	85.0	83.5	80.5	73.5	61.0	5.79	45.0	0.837	250	240	330	
		6	200	50	100L	945	83.0	84.0	83.0	71.5	63.5	50.5	7.26	45.0	1.536	250	220	260	0.059
			200	60		1130	82.5	85.0	85.5	75.5	69.5	57.5	6.91	36.0	1.285	200	190	220	
			220	60		1150	85.5	85.5	84.5	71.0	63.0	50.5	6.45	40.0	1.262	250	230	270	
3	2.2	2	200	50	90L	2865	85.0	86.0	85.5	87.0	81.5	71.5	8.74	75.0	0.760	340	290	350	0.014
			200	60		3445	85.5	86.0	85.5	90.0	86.5	79.0	8.40	68.0	0.632	290	230	310	
			220	60		3475	86.5	86.5	85.5	87.5	82.5	73.0	7.76	75.0	0.627	360	290	380	
		4	200	50	100L	1440	86.0	87.0	86.0	83.5	77.5	66.0	9.00	75.0	1.512	320	290	330	0.046
			200	60		1730	86.5	88.0	87.5	86.0	82.0	73.0	8.68	68.0	1.259	260	220	280	
			220	60		1745	87.5	88.0	86.5	83.5	78.0	67.5	8.04	75.0	1.248	320	280	340	
		6	200	50	112M	955	86.0	86.5	85.5	72.5	65.5	53.5	10.4	75.0	2.280	190	170	260	0.084
			200	60		1150	86.5	87.5	87.0	76.5	72.0	61.5	9.76	62.0	1.894	150	130	210	
			220	60		1160	87.5	88.0	86.5	72.5	66.0	54.0	9.26	68.0	1.877	180	150	270	
5	3.7	2	200	50	112M	2885	88.5	89.5	89.0	90.0	86.5	79.0	13.5	120	1.258	340	340	360	0.046
			200	60		3455	87.5	89.0	89.0	91.5	89.5	83.5	13.4	110	1.050	310	230	310	
			220	60		3480	88.5	89.5	88.5	90.0	87.0	79.5	12.3	120	1.043	380	290	380	
		4	200	50	112M	1435	86.0	87.0	87.0	86.5	83.0	74.0	14.5	120	2.529	220	150	290	0.076
			200	60		1720	85.5	87.0	88.0	88.5	86.5	80.0	14.2	100	2.110	180	120	250	
			220	60		1740	87.5	88.5	87.5	86.5	83.0	74.0	12.9	110	2.086	220	140	300	
		6	200	50	132S	965	86.0	86.0	84.5	76.0	68.5	55.0	16.5	120	3.761	180	180	270	0.131
			200	60		1160	87.5	88.5	87.5	81.5	76.5	65.5	15.1	100	3.129	150	150	230	
			220	60		1170	87.5	88.0	86.0	76.5	69.5	56.5	14.6	110	3.102	180	170	280	
7.5	5.5	2	200	50	132S	2915	89.0	89.5	88.5	86.5	83.5	75.0	21.0	175	1.868	240	190	290	0.063
			200	60		3495	88.5	89.0	88.5	89.0	87.5	83.0	20.5	145	1.558	180	150	240	
			220	60		3520	89.5	89.5	88.5	87.5	84.5	77.5	18.7	160	1.547	230	180	290	
		4	200	50	132S	1460	89.0	90.0	89.0	83.5	79.0	68.5	21.7	175	3.729	270	240	310	0.143
			200	60		1745	88.5	89.5	89.5	87.0	84.0	76.5	21.0	150	3.120	240	200	270	
			220	60		1760	89.5	90.0	89.0	84.5	80.0	70.5	19.4	165	3.093	290	230	320	
		6	200	50	132M	970	88.0	88.5	86.5	76.5	69.5	56.5	24.0	175	5.612	210	190	320	0.217
			200	60		1165	88.5	89.5	88.0	81.5	76.5	65.5	22.4	150	4.673	160	150	280	
			220	60		1170	89.5	89.0	87.0	77.0	70.0	57.5	21.3	165	4.653	200	180	340	
10	7.5	2	200	50	132S	2900	89.0	90.0	89.5	88.0	85.5	78.5	27.5	220	2.503	210	180	280	0.075
			200	60		3480	88.5	89.5	89.5	89.5	89.0	85.0	27.2	180	2.086	180	140	230	
			220	60		3505	89.5	90.0	89.5	88.5	86.5	80.5	24.6	200	2.071	210	170	280	
		4	200	50	132M	1455	89.0	89.5	89.0	83.5	79.0	68.5	29.0	220	4.989	260	230	300	0.143
			200	60		1745	88.5	90.0	90.0	87.5	85.0	78.0	27.8	180	4.160	220	180	250	
			220	60		1755	89.5	90.0	89.0	86.5	82.0	72.0	25.3	200	4.136	240	200	300	
		6	200	50	160M	970	88.5	89.0	88.5	81.0	74.5	63.5	30.0	220	7.483	270	210	300	0.484
			200	60		1170	90.2	90.5	90.0	84.5	80.5	70.5	28.3	185	6.204	220	190	240	
			220	60		1175	89.5	90.0	89.0	81.0	75.5	63.5	27.0	200	6.178	280	220	300	
15	11	2	200	50	160M	2390	90.0	91.0	90.0	90.0	87.0	79.0	39.9	320	3.716	250	200	320	0.173
			200	60		3520	89.5	90.5	89.5	91.0	89.5	83.5	39.7	285	3.093	210	160	270	
			220	60		3535	90.2	90.5	89.0	90.0	88.0	80.5	36.2	310	3.080	260	190	330	
		4	200	50	160M	1455	90.5	91.5	91.5	85.0	82.5	73.0	42.0	320	7.483	230	190	270	0.352
			200	60		1755	91.0	92.0	92.0	87.0	85.5	78.5	40.8	265	6.204	190	150	220	
			220	60		1760	91.0	92.0	91.5	86.0	83.0	74.5	37.5	290	6.186	240	190	270	
		6	200	50	160L	970	90.0	90.0	89.0	80.0	73.5	61.5	44.9	335	11.225	280	250	310	0.630
			200	60		1165	90.2	91.0	90.5	84.0	80.0	70.0	42.6	290	9.346	240	200	260	
			220	60		1175	90.2	90.5	89.0	80.5	74.5	63.0	40.4	320	9.266	280	250	310	

PERFORMANCE DATA AEHM / AEUM

TEFC, CLASS F INSULATION 40˚C AMBIENT TEMP.S.F. :1.15 at 60HZ (200/220V)

OUTPUT		Pole	Volt	Hz	Frame No.		EFFICIENCY			POWER FACTOR			CURRENT		TORQUE				
HP	kW					FULL LOAD RPM	FULL LOAD (%)	3/4 LOAD (%)	1/2 LOAD (%)	FULL LOAD (%)	3/4 LOAD (%)	1/2 LOAD (%)	FULL LOAD (A)	LOCKED ROTOR (A)	FULL LOAD kg-m	LOCKED ROTOR %FLT	PULL UP %FLT	BREAK DOWN %FLT	ROTOR GD^2 $kg\text{-}m^2$
20	15	2	200	50	160M	2930	90.5	91.5	91.0	90.0	87.0	79.0	52.9	425	4.955	260	200	320	0.183
			200	60		3520	90.2	91.0	90.5	91.0	90.0	84.5	52.5	380	4.124	210	160	270	
			220	60		3535	91.0	91.0	90.5	90.5	88.0	81.0	47.5	415	4.107	260	190	330	
		4	200	50	160L	1460	91.0	91.5	91.5	87.0	83.0	74.5	54.4	400	9.943	230	170	260	0.396
			200	60		1750	91.0	92.0	92.5	88.0	88.5	80.0	53.8	330	8.296	180	130	220	
			220	60		1760	91.7	92.5	92.0	87.5	84.5	76.0	48.8	360	8.248	230	160	270	
		6	200	50	180MC	970	90.5	92.0	92.0	84.0	80.0	71.0	56.7	400	14.966	220	180	240	1.233
			200	60		1165	90.2	92.0	92.5	84.0	83.0	77.5	56.8	330	12.461	180	140	200	
			220	60		1175	91.0	92.0	92.0	83.0	80.0	73.0	51.8	360	12.355	230	180	250	
25	18.5	2	200	50	160L	2925	90.6	92.0	92.0	91.0	89.5	83.5	65.3	510	6.204	240	180	300	0.218
			200	60		3510	91.0	92.0	91.5	92.0	91.5	87.0	64.3	440	5.170	200	140	290	
			220	60		3525	91.7	92.0	91.5	91.5	90.5	85.0	58.3	480	5.148	240	180	340	
		4	200	50	180MC	1465	91.7	92.0	92.0	85.0	81.0	72.5	69.1	510	12.387	210	190	280	0.707
			200	60		1760	92.4	93.5	93.5	88.5	87.5	83.0	65.8	410	10.310	180	150	240	
			220	60		1770	92.4	93.0	92.5	86.0	83.5	76.0	61.6	450	10.252	220	190	270	
		6	200	50	180LC	970	91.0	92.0	92.5	82.5	78.5	69.5	71.7	510	18.708	240	200	250	1.534
			200	60		1165	91.0	92.5	93.0	84.0	82.5	76.5	70.4	400	15.576	200	170	210	
			220	60		1175	91.7	93.0	92.5	83.0	80.0	71.5	64.3	440	15.444	240	200	250	
30	22	2	200	50	180MA	2930	91.5	92.0	91.5	90.5	89.0	83.0	78.0	610	7.432	230	180	300	0.283
			200	60		3525	91.7	92.0	92.0	91.5	91.5	89.0	77.0	510	6.178	180	140	260	
			220	60		3540	91.7	92.0	91.5	90.0	88.0	82.5	71.2	560	6.151	230	180	310	
		4	200	50	180MC	1465	92.0	92.5	92.0	81.5	76.5	66.0	86.2	610	14.864	220	200	290	0.792
			200	60		1760	91.7	92.5	92.5	88.0	88.0	83.5	80.1	515	12.373	190	160	240	
			220	60		1770	92.4	92.5	92.0	84.0	81.0	72.0	75.7	565	12.303	240	200	290	
		6	200	50	180LC	970	91.0	92.5	93.0	83.5	80.5	72.5	85.0	610	22.449	230	190	260	1.725
			200	60		1165	91.0	93.0	93.0	84.0	83.0	77.5	84.5	500	18.692	190	160	200	
			220	60		1175	91.7	93.0	93.0	83.5	81.0	73.5	76.7	550	18.533	250	190	260	
40	30	2	200	50	180LA	2935	91.5	92.5	92.0	87.5	84.5	76.0	108	800	9.892	240	190	300	0.340
			200	60		3530	92.4	93.0	93.0	91.5	91.5	88.0	102	710	8.225	200	150	270	
			220	60		3545	92.4	92.5	92.5	89.0	87.0	80.5	95.2	780	8.190	230	180	320	
		4	200	50	180LC	1465	93.0	94.0	93.5	84.5	80.5	71.5	110	810	19.819	270	230	290	1.003
			200	60		1755	93.6	94.0	94.5	89.0	88.5	84.5	103	700	16.544	210	170	220	
			220	60		1765	93.6	94.0	94.0	86.0	82.5	74.5	97.3	770	16.450	270	230	280	
		6	200	50	200LC	980	92.0	92.5	92.5	85.0	82.0	74.0	111	755	29.627	200	180	230	2.558
			200	60		1170	92.4	93.5	93.5	88.0	88.0	85.0	106	565	24.816	170	150	200	
			220	60		1175	93.0	93.5	93.0	85.5	83.5	76.0	98.5	620	24.710	200	180	230	
50	37	2	200	50	200LA	2945	92.5	93.0	92.5	87.5	84.0	76.0	133	980	12.324	180	160	290	1.018
			200	60		3530	91.7	92.5	92.0	92.5	92.5	90.5	127	840	10.281	130	120	240	
			220	60		3540	92.4	92.5	91.5	89.5	87.0	79.5	118	920	10.252	170	160	290	
		4	200	50	200LC	1475	93.0	93.5	93.0	82.5	79.0	70.0	140	880	24.605	190	150	240	1.484
			200	60		1765	93.0	93.5	94.0	88.0	88.0	84.5	132	865	20.563	150	140	200	
			220	60		1770	93.0	93.5	93.5	84.0	81.0	73.0	125	950	20.504	200	160	250	
		6	200	50	200LC	980	92.5	93.0	92.5	84.0	80.5	71.5	139	880	37.034	210	190	240	3.256
			200	60		1175	93.0	93.5	93.5	87.0	86.0	80.5	133	775	30.888	190	170	200	
			220	60		1180	93.0	93.5	93.0	85.0	82.0	74.0	124	850	30.757	220	200	230	
60	45	2	200	50	200LA	2940	93.0	93.5	93.5	90.0	89.0	84.0	154	1110	14.813	170	150	270	1.187
			200	60		3520	91.7	92.5	92.5	92.5	92.5	91.0	152	895	12.373	130	120	230	
			220	60		3540	93.0	93.0	92.5	91.0	90.0	87.0	139	980	12.303	170	150	270	
		4	200	50	200LC	1475	93.5	94.0	94.0	85.0	82.0	74.0	163	1110	29.526	190	160	240	1.896
			200	60		1770	93.0	94.0	94.5	87.5	86.5	82.5	159	965	24.605	170	150	200	
			220	60		1775	94.1	94.5	94.0	86.0	84.0	77.0	145	1060	24.536	210	170	240	
		6	200	50	225SC	980	92.5	93.0	93.5	86.5	84.0	77.0	161	1110	44.440	200	170	240	4.376
			200	60		1175	92.4	93.5	94.0	87.5	87.0	83.5	160	890	37.065	170	150	200	
			220	60		1180	93.6	94.0	93.5	87.0	85.0	78.5	144	980	36.908	220	180	220	
75	55	2	200	50	225SA	2965	94.5	94.5	94.5	88.0	86.5	80.0	194	1380	18.361	140	110	280	1.278
			200	60		3550	94.1	94.5	94.5	90.5	90.5	89.0	190	1110	15.335	110	100	240	
			220	60		3570	94.1	94.5	94.0	89.5	88.5	84.0	174	1220	15.249	150	110	290	
		4	200	50	225SC	1485	94.0	94.5	94.5	84.5	82.0	74.0	203	1380	36.659	230	200	240	3.186
			200	60		1775	93.6	94.0	94.5	87.0	86.5	83.0	198	1130	30.670	200	180	200	
			220	60		1780	94.1	94.5	94.5	86.0	84.0	77.5	181	1240	30.584	230	210	240	
		6	200	50	250SC	985	93.6	94.0	93.5	82.5	78.0	68.5	209	1380	55.268	200	160	260	6.492
			200	60		1180	93.7	94.5	94.5	86.5	84.5	78.5	199	1150	46.135	150	140	220	
			220	60		1185	94.1	94.5	93.5	84.0	80.5	71.5	186	1260	45.940	200	160	260	
100	75	2	200	50	250SA	2955	94.5	94.5	94.5	88.5	87.0	81.0	257	1850	24.564	130	110	280	1.759
			200	60		3555	94.1	94.5	94.5	90.5	90.5	88.0	253	1540	20.418	110	100	250	
			220	60		3565	94.1	94.5	94.0	89.0	87.5	83.0	234	1690	20.361	130	110	290	
		4	200	50	250SC	1475	94.1	94.0	94.0	88.5	87.0	81.5	259	1760	49.211	170	150	250	4.853
			200	60		1775	94.1	94.5	94.0	91.5	92.0	90.0	250	1455	40.893	130	115	200	
			220	60		1780	94.5	94.5	94.0	90.0	89.0	84.0	230	1600	40.779	170	140	250	
		6	200	50	250MC	985	93.6	94.5	94.0	84.5	81.5	73.0	272	1760	73.691	190	160	240	8.175
			200	60		1180	93.7	94.5	94.5	87.0	85.5	80.5	264	1460	61.513	150	140	210	
			220	60		1185	94.1	94.5	94.5	85.5	82.5	75.0	243	1600	61.254	190	160	250	
125	90	2	200	50	250MA	2960	94.5	95.0	94.5	86.0	82.5	74.0	331	2750	30.653	170	140	340	2.287
			200	60		3560	94.5	94.5	95.0	90.5	89.5	85.5	315	2300	25.487	130	120	290	
			220	60		3570	94.5	95.0	94.5	88.5	86.0	79.5	293	2530	25.415	160	150	350	
		4	200	50	250MC	1475	94.1	94.0	93.5	88.0	86.0	79.5	325	2360	61.513	190	150	240	5.393
			200	60		1775	94.1	94.5	94.0	89.5	90.0	86.5	320	1955	51.117	150	130	200	
			220	60		1780	94.5	94.5	94.0	89.0	88.0	82.0	291	2150	50.973	190	150	240	

PERFORMANCE DATA AEHM / AEUM

TEFC, CLASS F INSULATION 40˚C AMBIENT TEMP.S.F. :1.15 at 60HZ (230/460V)

OUTPUT		RPM	FRAME NO.	EFFICIENCY				POWER FACTOR			CURRENT		TORQUE				ROTOR GD²
				FULL LOAD		3/4 LOAD	1/2 LOAD		3/4 LOAD	1/2 LOAD	FULL LOAD	LOCKED ROTOR	FULL LOAD	LOCKED ROTOR	PULL UP	BREAK DOWN	
HP	kW			NOM.	MIN.	NOM.	NOM.	(%)	(%)	(%)	(A)	(A)	kg-m	%FLT	%FLT	%FLT	kg-m²
1	0.75	3410	80	78.5	75.5	79.5	76.5	86.0	81.0	69.5	2.77	18.0	0.213	280	280	310	0.005
		1725	80	82.5	80.0	83.0	80.0	73.5	65.0	51.5	3.09	24.0	0.421	350	350	380	0.011
		1155	90L	80.0	77.0	80.5	77.5	66.5	58.0	45.5	3.52	24.0	0.628	260	220	300	0.022
2	1.5	3470	90L	84.0	81.5	84.5	81.5	82.5	76.5	64.5	5.40	48.0	0.418	350	350	400	0.010
		1735	90L	84.0	81.5	85.0	83.5	80.5	73.5	61.0	5.54	43.0	0.837	250	240	330	0.020
		1175	112M	86.5	84.0	87.5	84.0	67.0	59.0	46.5	6.46	50.0	1.236	210	190	340	0.065
3	2.2	3475	90L	86.5	84.0	86.5	85.5	87.5	82.5	73.0	7.42	72.0	0.627	360	290	380	0.014
		1745	100L	87.5	85.5	88.0	86.5	83.5	78.0	67.5	7.69	72.0	1.248	320	280	340	0.046
		1160	112M	87.5	85.5	88.0	86.5	72.5	66.0	54.0	8.86	65.0	1.877	180	150	270	0.084
5	3.7	3480	112M	88.5	86.5	89.5	88.5	90.0	87.0	79.5	11.8	115	1.043	380	290	380	0.046
		1740	112M	87.5	85.5	88.5	87.5	86.5	83.0	74.0	12.4	105	2.086	220	140	300	0.076
		1170	132S	87.5	85.5	88.0	86.0	76.5	69.5	56.5	14.0	105	3.102	180	170	280	0.131
7.5	5.5	3520	132S	89.5	87.5	89.5	88.5	87.5	84.5	77.5	17.9	153	1.547	230	180	290	0.063
		1760	132S	89.5	87.5	90.0	89.0	84.5	80.0	70.5	18.6	158	3.093	290	230	320	0.143
		1170	132M	89.5	87.5	89.0	87.0	77.0	70.0	57.5	20.4	158	4.653	200	180	340	0.217
10	7.5	3505	132S	89.5	87.5	90.0	89.5	88.5	86.5	80.5	23.6	191	2.071	210	170	280	0.075
		1755	132M	89.5	87.5	90.0	89.0	86.5	82.0	72.0	24.2	191	4.136	240	200	300	0.143
		1175	160M	89.5	87.5	90.0	89.0	81.0	75.5	63.5	25.8	191	6.178	280	220	300	0.484
15	11	3535	160M	90.2	88.5	90.5	89.0	90.0	88.0	80.5	34.6	297	3.080	260	190	330	0.173
		1760	160M	91.0	89.5	92.0	91.5	86.0	83.0	74.5	35.9	277	6.186	240	190	270	0.352
		1175	160L	90.2	88.5	90.5	89.0	80.5	74.5	63.0	38.7	306	9.266	280	250	310	0.630
20	15	3535	160M	91.0	89.5	91.0	90.5	90.5	88.0	81.0	45.5	397	4.107	260	190	330	0.183
		1760	160L	91.7	90.2	92.5	92.0	87.5	84.5	76.0	46.7	344	8.248	230	160	270	0.396
		1175	180MC	91.0	89.5	92.0	92.0	83.0	80.0	73.0	49.6	344	12.355	230	180	250	1.233
25	18.5	3525	160L	91.7	90.2	92.0	91.5	91.5	90.5	85.0	55.8	459	5.148	240	180	340	0.218
		1770	180MC	92.4	91.0	93.0	92.5	86.0	83.5	76.0	58.9	430	10.252	220	190	270	0.707
		1175	180LC	91.7	90.2	93.0	92.5	83.0	80.0	71.5	61.5	421	15.444	240	200	250	1.534
30	22	3540	180MA	91.7	90.2	92.0	91.5	90.0	88.0	82.5	68.1	536	6.151	230	180	310	0.283
		1770	180MC	92.4	91.0	92.5	92.0	84.0	81.0	72.0	72.4	540	12.303	240	200	290	0.792
		1175	180LC	91.7	90.2	93.0	93.0	83.5	81.0	73.5	73.4	526	18.533	250	190	260	1.725
40	30	3545	180LA	92.4	91.0	92.5	92.5	89.0	87.0	80.5	91.1	746	8.190	230	180	320	0.340
		1765	180LC	93.6	92.4	94.0	94.0	86.0	82.5	74.5	93.1	737	16.450	270	230	280	1.003
		1175	200LC	93.0	91.7	93.5	93.0	85.5	83.5	76.0	94.2	593	24.710	200	180	230	2.558
50	37	3540	200LA	92.4	91.0	92.5	91.5	89.5	87.0	79.5	113	880	10.252	170	160	290	1.018
		1770	200LC	93.0	91.7	93.5	93.5	84.0	81.0	73.0	120	909	20.504	200	160	250	1.484
		1180	200LC	93.0	91.7	93.5	93.0	85.0	82.0	74.0	118	813	30.757	220	200	230	3.256
60	45	3540	200LA	93.0	91.7	93.0	92.5	91.0	90.0	87.0	133	937	12.303	170	150	270	1.187
		1775	200LC	94.1	93.0	94.5	94.0	86.0	84.0	77.0	139	1014	24.536	210	170	240	1.896
		1180	225SC	93.6	92.4	94.0	93.5	87.0	85.0	78.5	138	937	36.908	220	180	220	4.376
75	55	3570	225SA	94.1	93.0	94.5	94.0	89.5	88.5	84.0	167	1167	15.249	150	110	290	1.278
		1780	225SC	94.1	93.0	94.5	94.5	86.0	84.0	77.5	174	1186	30.584	230	210	240	3.186
		1185	250SC	94.1	93.0	94.5	93.5	84.0	80.5	71.5	178	1205	45.940	200	160	260	6.492
100	75	3565	250SA	94.1	93.0	94.5	94.0	89.0	87.5	83.0	224	1617	20.361	130	110	290	1.759
		1780	250SC	94.5	93.6	94.5	94.0	90.0	89.0	84.0	220	1530	40.779	170	140	250	4.853
		1185	250MC	94.1	93.0	94.5	94.5	85.5	82.5	75.0	233	1530	61.254	190	160	250	8.175
125	90	3570	250MA	94.5	93.6	95.0	94.5	88.5	86.0	79.5	280	2420	25.415	160	150	350	2.287
		1780	250MC	94.5	93.6	94.5	94.0	89.0	88.0	82.0	278	2057	50.973	190	150	240	5.393
150	110	3570	280S	94.5	93.6	94.8	94.0	89.0	86.0	80.0	334	2487	29.98	120	100	280	3.900
		1780	280S	95.0	94.1	94.7	94.0	87.0	85.0	80.0	340	2487	60.13	150	130	210	8.500
		1185	280M	95.0	94.1	95.1	94.8	85.0	82.0	74.0	348	2487	90.32	180	150	220	15.10
175	132	3570	280M	95.0	94.1	95.2	94.2	90.0	88.0	81.0	383	2870	35.98	100	85	280	4.500
		1780	280M	95.0	94.1	95.2	94.2	88.0	86.0	81.0	392	2870	72.16	150	130	210	9.800
		1186	315S	95.0	94.1	95.2	94.8	86.0	83.0	74.0	401	2870	108.3	180	150	220	18.90
215	160	3570	315S	95.0	94.1	95.0	94.3	90.0	88.0	81.0	471	3635	43.61	120	100	280	5.400
		1780	315S	95.0	94.1	95.2	94.2	88.0	86.0	81.0	482	3443	87.46	150	130	220	10.50
		1186	315M	95.0	94.1	95.2	94.6	86.0	83.0	74.0	493	3443	131.3	170	150	220	20.80
270	200	3570	315M	95.4	94.5	95.3	94.6	89.0	86.0	79.0	596	4400	54.51	120	100	280	6.000
		1780	315M	95.4	94.5	95.3	94.5	88.0	86.0	81.0	602	4400	109.3	150	130	220	13.10

NOTE : 1.The above are typical values based on test accord to JIS C4212,IEEE 112 Standard method B.

2.Tolerance according to IEC 34-1 & JIS C4212.

3.Efficiency, power factor, speed and torque are the same for other voltages.
Current values vary inversely with voltage.

4.For Epact efficiency requirement. 6P-2HP need to use Frame No.112M.

5.Data subject to change without notice.

PERFORMANCE DATA AEHM / AEUM

TEFC, CLASS F INSULATION 40˚C AMBIENT TEMP.S.F. :1.15 at 60HZ (220/380V)

OUTPUT		FULL LOAD RPM	FRAME NO.	EFFICIENCY			POWER FACTOR			CURRENT			TORQUE				ROTOR GD²
HP	kW			FULL LOAD (%)	3/4 LOAD (%)	1/2 LOAD (%)	FULL LOAD (%)	3/4 LOAD (%)	1/2 LOAD (%)	FULL LOAD (A) 220V	FULL LOAD (A) 380V	LOCKED ROTOR (A) 220V	FULL LOAD kg-m	LOCKED ROTOR %FLT	PULL UP %FLT	BREAK DOWN %FLT	kg-m²
1	0.75	3410	80	78.5	79.5	76.5	86.0	81.0	69.5	2.92	1.69	19.0	0.214	280	280	310	0.005
		1725	80	82.5	83.0	80.0	73.5	65.0	51.5	3.25	1.88	25.0	0.423	350	350	380	0.011
		1155	90L	80.0	80.5	77.5	66.5	58.0	45.5	3.70	2.14	25.0	0.632	260	220	300	0.022
2	1.5	3470	90L	84.0	84.5	81.5	82.5	76.5	64.5	5.68	3.29	50.0	0.421	350	350	400	0.010
		1735	90L	84.0	85.0	83.5	80.5	73.5	61.0	5.82	3.37	45.0	0.841	250	240	330	0.020
		1150	100L	86.5	86.5	84.5	71.0	63.0	50.5	6.41	3.71	40.0	1.269	260	230	270	0.059
3	2.2	3475	90L	86.5	86.5	85.5	87.5	82.5	73.0	7.63	4.42	75.0	0.616	360	290	380	0.014
		1745	100L	87.5	88.0	86.5	83.5	78.0	67.5	7.90	4.58	75.0	1.227	320	280	340	0.046
		1160	112M	87.5	88.0	86.5	72.5	66.0	54.0	9.10	5.27	68.0	1.845	180	150	270	0.084
5	3.7	3480	112M	88.5	89.5	88.5	90.0	87.0	79.5	12.2	7.06	120	1.035	380	290	380	0.046
		1740	112M	87.5	88.5	87.5	86.5	83.0	74.0	12.8	7.43	110	2.069	220	140	300	0.076
		1170	132S	87.5	88.0	86.0	76.5	69.5	56.5	14.5	8.40	110	3.077	180	170	280	0.131
7.5	5.5	3520	132S	89.5	89.5	88.5	87.5	84.5	77.5	18.4	10.7	160	1.520	230	180	290	0.063
		1760	132S	89.5	90.0	89.0	84.5	80.0	70.5	19.1	11.0	165	3.041	290	230	320	0.143
		1170	132M	89.5	89.0	87.0	77.0	70.0	57.5	20.9	12.1	165	4.574	200	180	340	0.217
10	7.5	3505	132S	89.5	90.0	89.5	88.5	86.5	80.5	24.8	14.4	200	2.082	210	170	280	0.075
		1755	132M	89.5	90.0	89.0	86.5	82.0	72.0	25.4	14.7	200	4.158	240	200	300	0.143
		1175	160M	89.5	90.0	89.0	81.0	75.5	63.5	27.2	15.7	200	6.211	280	220	300	0.484
15	11	3535	160M	90.2	90.5	89.0	90.0	88.0	80.5	35.6	20.6	310	3.028	260	190	330	0.173
		1760	160M	91.0	92.0	91.5	86.0	83.0	74.5	36.9	21.4	290	6.081	240	190	270	0.352
		1175	160L	90.2	90.5	89.0	80.5	74.5	63.0	39.8	23.0	320	9.109	280	250	310	0.630
20	15	3535	160M	91.0	91.0	90.5	90.5	88.0	81.0	47.8	27.7	415	4.129	260	190	330	0.183
		1760	160L	91.7	92.5	92.0	87.5	84.5	76.0	49.1	28.4	360	8.293	230	160	270	0.396
		1175	180MC	91.0	92.0	92.0	83.0	80.0	73.0	52.1	30.2	360	12.421	230	180	250	1.233
25	18.5	3525	160L	91.7	92.0	91.5	91.5	90.5	85.0	57.9	33.5	480	5.107	240	180	340	0.218
		1770	180MC	92.4	93.0	92.5	86.0	83.5	76.0	61.1	35.4	450	10.170	220	190	270	0.707
		1175	180LC	91.7	93.0	92.5	83.0	80.0	71.5	63.8	36.9	440	15.320	240	200	250	1.534
30	22	3540	180MA	91.7	92.0	91.5	90.0	88.0	82.5	70.0	40.5	560	6.047	230	180	310	0.283
		1770	180MC	92.4	92.5	92.0	84.0	81.0	72.0	74.4	43.1	565	12.094	240	200	290	0.792
		1175	180LC	91.7	93.0	93.0	83.5	81.0	73.5	75.4	43.7	550	18.218	250	190	260	1.725
40	30	3545	180LA	92.4	92.5	92.5	89.0	87.0	80.5	95.7	55.4	780	8.234	230	180	320	0.340
		1765	180LC	93.6	94.0	94.0	86.0	82.5	74.5	97.8	56.6	770	16.538	270	230	280	1.003
		1175	200LC	93.0	93.5	93.0	85.5	83.5	76.0	99.0	57.3	620	24.843	200	180	230	2.558
50	37	3540	200LA	92.4	92.5	91.5	89.5	87.0	79.5	117	68.0	920	10.170	170	160	290	1.018
		1770	200LC	93.0	93.5	93.5	84.0	81.0	73.0	124	72.0	950	20.340	200	160	250	1.484
		1180	200LC	93.0	93.5	93.0	85.0	82.0	74.0	123	71.1	850	30.509	220	200	230	3.256
60	45	3540	200LA	93.0	93.0	92.5	91.0	90.0	87.0	140	80.8	980	12.369	170	150	270	1.187
		1775	200LC	94.1	94.5	94.0	86.0	84.0	77.0	146	84.5	1060	24.668	210	170	240	1.896
		1180	225SC	93.6	94.0	93.5	87.0	85.0	78.5	145	84.0	980	37.106	220	180	220	4.376
75	55	3570	225SA	94.1	94.5	94.0	89.5	88.5	84.0	171	99.2	1220	14.990	150	110	290	1.278
		1780	225SC	94.1	94.5	94.5	86.0	84.0	77.5	178	103	1240	30.065	230	210	240	3.186
		1185	250SC	94.1	94.5	93.5	84.0	80.5	71.5	183	106	1260	45.160	200	160	260	6.492
100	75	3565	250SA	94.1	94.5	94.0	89.0	87.5	83.0	235	136	1690	20.470	130	110	290	1.759
		1780	250SC	94.5	94.5	94.0	90.0	89.0	84.0	231	134	1600	40.997	170	140	250	4.853
		1185	250MC	94.1	94.5	94.5	85.5	82.5	75.0	245	142	1600	61.582	190	160	250	8.175
125	90	3570	250MA	94.5	95.0	94.5	88.5	86.0	79.5	282	164	2530	24.529	160	150	350	2.287
		1780	250MC	94.5	94.5	94.0	89.0	88.0	82.0	281	163	2150	49.197	190	150	240	5.393
		1780	250MC	94.5	94.5	94.0	89.0	82.0	74.0	294	170	2000	73.899	190	150	240	5.393
150	110	3570	280S	94.8	94.8	94.0	89.0	86.0	80.0	342	198	2600	29.98	120	100	280	3.900
		1780	280S	95.0	94.7	94.0	87.0	85.0	80.0	349	202	2600	60.13	150	130	210	8.500
		1185	280M	95.0	95.1	94.8	85.0	82.0	74.0	358	207	2600	90.32	180	150	220	15.10
175	132	3570	280M	95.0	95.2	94.2	90.0	88.0	81.0	405	235	3000	35.98	100	85	280	4.500
		1780	280M	95.1	95.2	94.2	88.0	86.0	81.0	414	240	3000	72.16	150	130	210	9.800
		1186	315S	95.0	95.2	94.8	86.0	83.0	74.0	424	245	3000	108.3	180	150	220	18.90
215	160	3570	315S	95.1	95.0	94.3	90.0	88.0	81.0	491	284	3800	43.61	120	100	280	5.400
		1780	315S	95.1	95.2	94.2	88.0	86.0	81.0	502	290	3600	87.46	150	130	220	10.50
		1186	315M	95.1	95.2	94.6	86.0	83.0	74.0	513	297	3600	131.3	170	150	220	20.80
270	200	3570	315M	95.4	95.3	94.6	89.0	86.0	79.0	618	358	4600	54.51	120	100	280	6.000
		1780	315M	95.4	95.3	94.5	88.0	86.0	81.0	625	362	4600	109.3	150	130	220	13.10

PERFORMANCE DATA AEHM / AEUM

TEFC, CLASS F INSULATION 40˚C AMBIENT TEMP.S.F. :1.0 at 50HZ (220/380V)

OUTPUT		FULL LOAD RPM	FRAME NO.	EFFICIENCY			POWER FACTOR			CURRENT			TORQUE				ROTOR GD² kg-m²
HP	kW			FULL LOAD (%)	3/4 LOAD (%)	1/2 LOAD (%)	FULL LOAD (%)	3/4 LOAD (%)	1/2 LOAD (%)	FULL LOAD (A) 220V	FULL LOAD (A) 380V	LOCKED ROTOR (A) 220V	FULL LOAD kg-m	LOCKED ROTOR %FLT	PULL UP %FLT	BREAK DOWN %FLT	
1	0.75	2820	80	78.0	79.0	77.5	85.5	79.0	66.0	2.95	1.71	11	0.259	260	210	280	0.005
		1425	80	81.0	81.0	78.5	74.5	65.5	51.5	3.26	1.89	13	0.512	330	320	350	0.011
		950	90L	79.0	78.5	76.5	66.5	57.0	44.5	3.75	2.17	11	0.768	260	240	280	0.022
1.5	1.1	2805	80	81.0	81.5	79.5	86.5	81.0	68.0	4.12	2.39	15	0.382	250	220	270	0.005
		1430	90L	82.0	82.5	82.0	83.5	77.5	65.5	4.22	2.44	16	0.748	240	190	260	0.017
		945	100L	80.5	81.5	80.5	71.5	63.5	51.0	5.02	2.90	17	1.133	260	230	260	0.059
2	1.5	2870	90L	83.0	83.5	81.5	81.0	73.5	60.5	5.86	3.39	27	0.509	330	330	380	0.010
		1430	90L	82.8	82.5	81.5	82.0	74.0	61.0	5.80	3.36	24	1.021	240	230	300	0.020
		945	100L	83.0	84.0	82.5	71.5	63.5	50.5	6.63	3.84	24	1.544	250	220	260	0.059
3	2.2	2865	90L	84.5	85.5	85.0	87.0	81.5	71.5	7.85	4.55	40	0.747	340	290	350	0.014
		1440	100L	85.0	85.5	84.5	82.0	77.5	66.0	8.26	4.80	40	1.487	320	290	330	0.046
		955	112M	85.0	85.5	84.5	72.5	65.5	53.5	9.37	5.42	40	2.241	190	170	260	0.084
4	3	2850	100L	85.0	86.0	86.0	88.5	83.5	76.0	10.5	6.06	46	1.024	340	330	360	0.023
		1430	100L	85.5	86.0	85.5	83.5	78.0	67.0	11.0	6.38	49	2.041	310	270	320	0.050
		965	132S	85.0	85.0	83.0	75.5	67.5	55.0	12.3	7.10	43	3.025	200	200	290	0.114
5.5	4	2915	112M	87.0	88.0	87.5	90.0	87.0	78.0	13.4	7.76	76	1.335	280	260	360	0.046
		1455	112M	87.0	86.8	85.5	83.0	77.0	66.0	14.5	8.42	65	2.675	230	210	300	0.076
		965	132M	85.0	85.0	83.0	77.0	70.0	57.0	16.0	9.29	57	4.033	190	180	270	0.131
7.5	5.5	2915	132S	88.5	88.5	88.0	86.5	83.5	75.0	18.9	10.9	92	1.836	240	190	290	0.063
		1470	132S	88.0	88.0	86.0	82.0	75.0	64.0	20.0	11.6	92	3.640	270	240	310	0.143
		970	132M	87.0	87.0	85.0	76.5	69.5	56.5	21.7	12.6	92	5.517	240	210	340	0.217
10	7.5	2930	132S	89.0	89.5	89.0	87.0	84.0	76.0	25.4	14.7	116	2.491	210	180	280	0.075
		1460	132M	88.7	89.0	87.5	85.5	80.5	70.0	26.0	15.0	116	4.998	260	230	300	0.143
		970	160M	88.0	88.0	87.0	81.0	74.5	63.5	27.6	16.0	116	7.523	270	210	300	0.484
15	11	2945	160M	90.0	90.0	90.0	90.0	89.0	84.0	35.6	20.6	168	3.634	250	200	320	0.173
		1455	160M	89.8	90.0	89.5	85.0	82.5	73.0	37.8	21.9	168	7.356	230	190	270	0.352
		975	160L	88.7	88.5	87.5	80.0	73.5	61.5	40.7	23.6	176	10.98	330	300	340	0.630
20	15	2945	160M	90.5	91.0	90.5	92.0	89.0	83.0	47.3	27.4	224	4.956	260	200	320	0.183
		1460	160L	90.6	90.3	90.0	87.0	83.0	74.5	49.9	28.9	211	9.997	230	170	260	0.396
		970	180M	89.7	90.5	90.0	84.0	80.0	71.0	52.2	30.2	211	15.05	220	180	240	1.233
25	18.5	2925	160L	90.9	90.5	90.0	91.0	89.5	83.5	58.7	34.0	268	6.154	240	180	300	0.218
		1465	180M	91.2	91.0	90.5	85.0	81.0	72.5	62.6	36.3	268	12.29	210	190	280	0.707
		970	180L	90.4	90.5	91.0	82.5	78.5	69.5	65.1	37.7	268	18.56	240	200	250	1.534
30	22	2945	180M	91.3	91.0	90.5	90.5	89.0	83.0	69.9	40.5	310	7.269	230	180	300	0.283
		1465	180M	91.6	91.5	91.0	81.5	76.5	66.0	77.3	44.8	321	14.61	220	200	290	0.792
		970	180L	90.9	91.0	91.5	84.0	82.0	75.0	75.6	43.8	270	22.07	230	190	260	1.725
40	30	2935	180L	92.0	91.5	91.0	87.5	84.5	76.0	97.8	56.6	421	9.945	240	190	300	0.358
		1475	180L	92.3	92.5	92.5	84.0	81.0	73.0	102	58.8	426	19.79	240	230	290	1.003
		980	200L	91.7	91.0	91.0	85.0	82.0	74.0	101	58.5	397	29.79	200	180	230	2.558
50	37	2945	200L	92.5	92.0	91.5	87.5	84.0	76.0	120	69.5	516	12.22	180	160	290	1.018
		1480	200L	92.7	93.0	93.0	87.5	85.0	78.0	120	69.3	450	24.33	190	150	240	1.481
		980	200L	92.2	91.5	91.0	84.0	80.5	71.5	125	72.6	463	36.74	210	190	240	3.256
60	45	2940	200L	92.9	92.5	92.0	90.0	89.0	84.0	141	81.8	584	14.89	170	150	270	1.187
		1475	200L	93.1	93.0	93.0	87.5	86.0	80.0	145	83.9	584	29.68	190	160	240	1.896
		980	225S	92.7	92.5	92.0	86.5	84.0	77.0	147	85.3	584	44.68	200	170	240	4.376
75	55	2965	225S	93.2	93.0	92.5	88.0	86.5	80.0	176	102	726	18.05	140	110	280	1.278
		1480	225S	93.5	93.0	93.0	87.0	85.0	81.0	177	103	700	36.16	250	200	250	3.186
		985	250S	93.1	93.0	92.5	82.5	78.0	68.5	188	109	726	54.33	200	160	260	6.492
100	75	2955	250S	93.8	93.5	93.0	88.5	87.0	81.0	237	137	974	24.70	130	110	280	1.759
		1475	250S	94.0	93.5	93.0	88.5	87.0	81.5	237	137	926	49.47	170	150	250	4.853
		985	250M	93.7	93.0	92.5	84.5	81.5	73.0	249	144	926	74.09	190	160	240	8.175
125	90	2960	250M	94.1	93.5	93.0	86.0	82.5	74.0	292	169	1447	29.58	170	140	340	2.287
		1475	250M	94.2	93.5	93.0	88.0	86.0	79.5	285	165	1242	59.37	190	150	240	5.393
		985	280S	94.2	94.5	94.0	84.0	81.0	72.0	298	173	1053	88.90	180	150	220	13.20
150	110	2967	280S	94.4	94.6	94.2	87.0	85.0	77.0	352	204	1368	36.07	120	100	280	3.900
		1475	280S	94.5	94.6	93.9	86.0	84.0	79.0	355	206	1368	72.56	150	130	210	8.500
		985	280M	94.5	94.6	94.2	84.0	81.0	72.0	364	211	1368	108.7	180	150	220	15.10
175	132	2967	280M	94.8	94.8	94.5	88.0	86.0	80.0	415	240	1632	43.29	110	90	280	4.500
		1480	280M	94.7	94.7	94.2	87.0	85.0	80.0	420	243	1632	86.78	150	130	210	9.800
		986	315S	94.6	94.7	94.2	85.0	82.0	74.0	431	249	1632	130.3	180	150	230	18.90
215	160	2972	315S	94.9	95.0	94.5	89.0	87.0	80.0	497	288	2000	52.38	120	100	280	5.400
		1480	315S	94.9	94.9	94.0	87.0	86.0	81.0	509	294	1947	105.2	150	130	220	10.50
		986	315M	94.8	94.8	94.3	85.0	82.0	74.0	521	302	1947	157.9	180	150	230	20.80
270	200	2972	315M	95.1	95.0	94.5	88.0	85.0	78.0	627	363	2421	65.48	120	100	280	6.000
		1480	315M	95.1	95.0	94.5	86.0	84.0	79.0	642	372	2421	131.5	150	130	220	13.10

NOTE : 1. The above are typical values based on test accord to ANSI / IEEE standard 112 method B.

2. Tolerance according to IEC 60034-1.

3. Efficiency, power factor, speed and torque are the same for other voltages.

Current values vary inversely with voltage.

4. Data subject to change without notice.

Dimension - AEHM

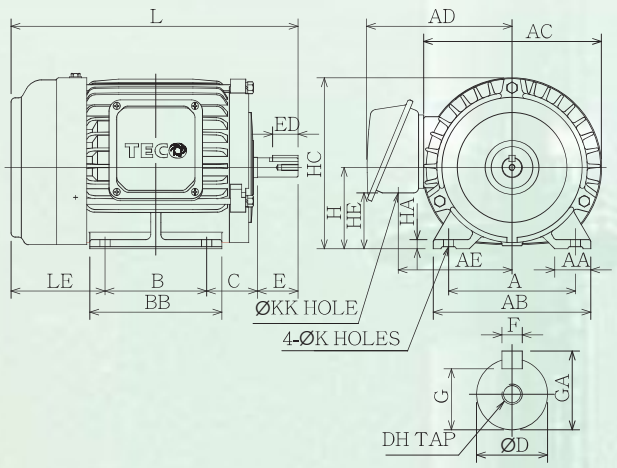

FIG1

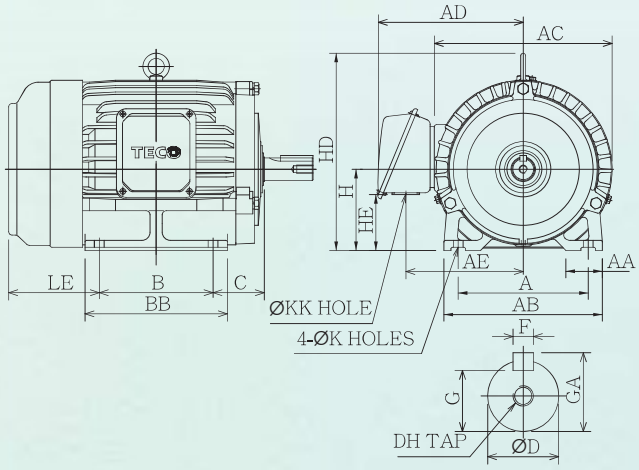

FIG2

Dimension in mm

Output (HP)			Frame Size	FIG NO.	A	AA	AB	AC	AD	AE	B	BB	C	H	HA	HC	HD	HE
2P	4P	6P																
0.25	0.25	—	63	1	100	28.0	120	144	123	93	80	100	40	63	8.0	135	—	29
0.5	0.5	—	71		112	35.5	140	162	133	103	90	115	45	71	8.0	152	—	54
1	1	0.5	80		125	35.5	155	177	144	112	100	130	50	80	9.0	168	—	55
2 3	2	1	90L		140	35.5	170	200	157	125	125	150	56	90	10.0	190	—	65
—	3	2	100L	2	160	45.0	195	219	180	145	140	175	63	100	12.5	—	243	71
5	5	3	112M		190	45.0	224	238	189	154	140	175	70	112	14.0	—	265	83
7.5 10	7.5	5	132S		216	45.0	250	273	225	180	140	175	89	132	16.0	—	310	83
—	10	7.5	132M		216	45.0	250	273	225	180	178	212	89	132	16.0	—	310	83

Frame Size	K	KK	L	LE	SHAFT EXTENSION							BEARING		APPROX. WEIGHT kgs
					D	E	ED	F	G	GA	DH	DRIVE END	OPPOSITE DRIVE END	
63	ϕ7	ϕ22	219.0	76.0	11	23	18	4	8.5	12.5	M4×8	6201ZZ	6201ZZ	8.5
71	ϕ7	ϕ22	250.5	85.5	14	30	24	5	11.0	16.0	M5×10	6202ZZ	6202ZZ	11.5
80	ϕ10	ϕ22	282.0	92.0	19	40	25	6	15.5	21.5	M6×12	6204ZZ	6204ZZ	17.0
90L	ϕ10	ϕ22	332.5	101.5	24	50	32	8	20.0	27.0	M8×16	6205ZZ	6205ZZ	24.0
100L	ϕ12	ϕ28	374.5	111.5	28	60	40	8	24.0	31.0	M10×20	6206ZZ	6305ZZ	38.0
112M	ϕ12	ϕ28	391.0	121.0	28	60	40	8	24.0	31.0	M10×20	6306ZZ	6306ZZ	46.0
132S	ϕ12	ϕ35	454.0	145.0	38	80	64	10	33.0	41.0	M12×24	6308ZZ	6306ZZ	68.0
132M	ϕ12	ϕ35	492.0	145.0	38	80	64	10	33.0	41.0	M12×24	6308ZZ	6306ZZ	79.0

Note : 1.Tolerance of Shaft End Diameter : ϕ11 ~ ϕ28 : J6 , ϕ38 : K6 。

2.Tolerance of Shaft Center Height : +0 , -0.5 。

Dimension - AEHM

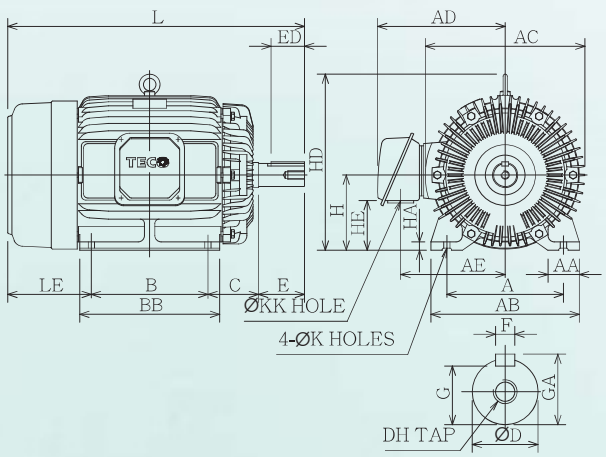

FIG3

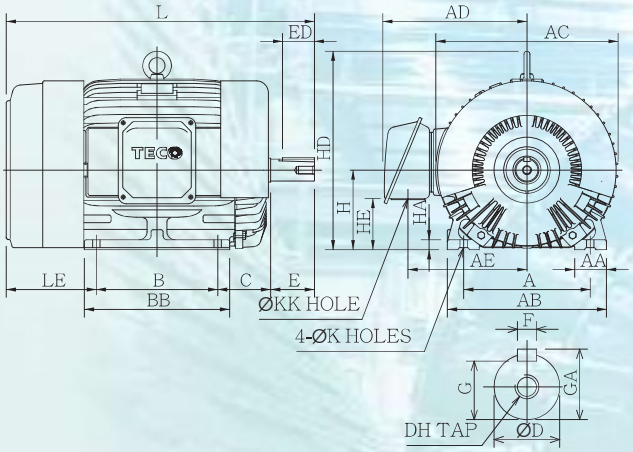

FIG4

Dimension in mm

Output (HP)			Frame Size	FIG NO.	A	AA	AB	AC	AD	AE	B	BB	C	H	HA	HD	HE
2P	4P	6P															
15 20	15	10	160M	3	254	50	300	334	263	218	210	250	108	160	18	377	108
25	20	15	160L		254	50	300	334	263	218	254	300	108	160	18	377	108
30	—	—	180MA	4	279	75	355	382	305	250	241	297	121	180	22	431	119
—	25 30	20	180MC	3	279	75	355	382	305	250	241	297	121	180	22	431	119
40	—	—	180LA	4	279	75	355	382	305	250	279	335	121	180	22	431	119
—	40	25 30	180LC	3	279	75	355	382	305	250	279	335	121	180	22	431	119
50 60	—	—	200LA	4	318	80	400	458	362	299	305	365	133	200	25	499	129
—	50 60	40 50	200LC	3	318	80	400	458	362	299	305	365	133	200	25	499	129
75	—	—	225SA	4	356	100	450	510	411	337	286	350	149	225	30	550	153
—	75	60	225SC	3	356	100	450	510	411	337	286	350	149	225	30	550	153

Frame Size	K	KK	L	LE	SHAFT EXTENSION							BEARING		APPROX. WEIGHT kgs
					D	E	ED	F	G	GA	DH	DRIVE END	OPPOSITE DRIVE END	
160M	ϕ14.5	ϕ35	608.0	180.0	42	110	80	12	37.0	45.0	M16×32	6309ZZ	6307ZZ	125
160L	ϕ14.5	ϕ35	652.0	180.0	42	110	80	12	37.0	45.0	M16×32	6309ZZ	6307ZZ	140
180MA	ϕ14.5	ϕ52	672.0	200.0	48	110	80	14	42.5	51.5	M16×32	6311ZZC3	6310ZZC3	182
180MC	ϕ14.5	ϕ52	672.0	200.0	48	110	80	14	42.5	51.5	M16×32	6311ZZ	6310ZZ	198
180LA	ϕ14.5	ϕ52	710.0	200.0	55	110	80	16	49.0	59.0	M20×40	6312ZZC3	6310ZZC3	198
180LC	ϕ14.5	ϕ52	710.0	200.0	55	110	80	16	49.0	59.0	M20×40	6312ZZ	6310ZZ	225
200LA	ϕ18.5	ϕ65	774.5	226.5	55	110	80	16	49.0	59.0	M20×40	6312ZZC3	6212ZZC3	342
200LC	ϕ18.5	ϕ65	804.5	226.5	60	140	110	18	53.0	64.0	M20×40	6314ZZ	6212ZZ	362
225SA	ϕ18.5	ϕ92	786.0	241.0	55	110	80	16	49.0	59.0	M20×40	6312ZZC3	6212ZZC3	445
225SC	ϕ18.5	ϕ92	816.0	241.0	65	140	110	18	58.0	69.0	M20×40	6315ZZ	6213ZZ	460

Note :1.Tolerance of Shaft End Diameter : ϕ42 ~ ϕ48 : k6 , ϕ55 ~ ϕ65 : m6 。

2.Tolerance of Shaft Center Height : +0 , -0.5 。

Dimension - AEHM

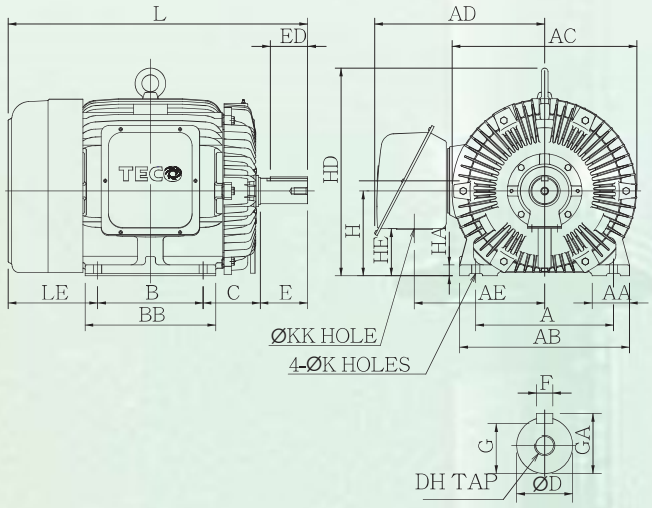

FIG5

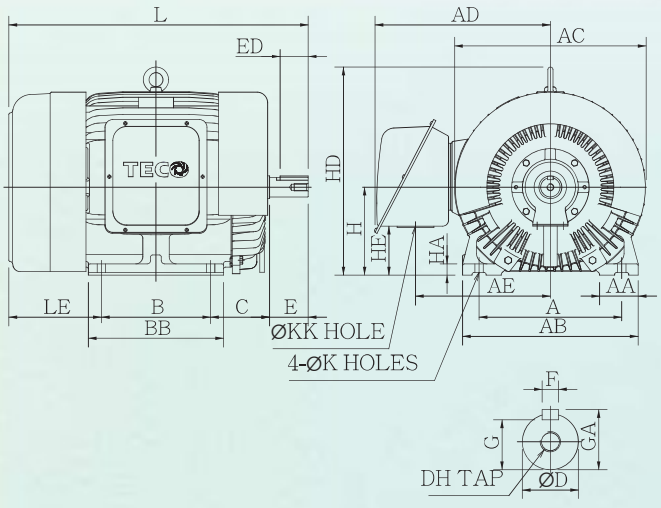

FIG6

Dimension in mm

Output (HP)			Frame Size	FIG NO.	A	AA	AB	AC	AD	AE	B	BB	C	H	HA	HD	HE
2P	4P	6P															
100	—	—	250SA	6	406	110	500	545	499	384	311	385	168	250	32	612	139
—	100	75	250SC	5	406	110	500	545	499	384	311	385	168	250	32	612	139
125	—	—	250MA	6	406	110	500	545	499	384	349	425	168	250	32	612	139
—	125	100	250MC	5	406	110	500	545	499	384	349	425	168	250	32	612	139

Frame Size	K	KK	L	LE	SHAFT EXTENSION							BEARING		APPROX. WEIGHT kgs
					D	E	ED	F	G	GA	DH	DRIVE END	OPPOSITE DRIVE END	
250SA	ϕ24	ϕ92	852.5	263.5	55	110	80	16	49.0	59.0	M20×40	6313C3	6313C3	449
250SC	ϕ24	ϕ92	882.5	263.5	75	140	110	20	67.5	79.5	M20×40	NU316	6313	508
250MA	ϕ24	ϕ92	890.5	263.5	55	110	80	16	49.0	59.0	M20×40	6313C3	6313C3	517
250MC	ϕ24	ϕ92	920.5	263.5	75	140	110	20	67.5	79.5	M20×40	NU316	6313	575

Note：1. Tolerance of Shaft End Diameter : ϕ55 ~ ϕ75 : m6。

2. Tolerance of Shaft Center Height : +0 , -0.5。

Dimension - AEHM

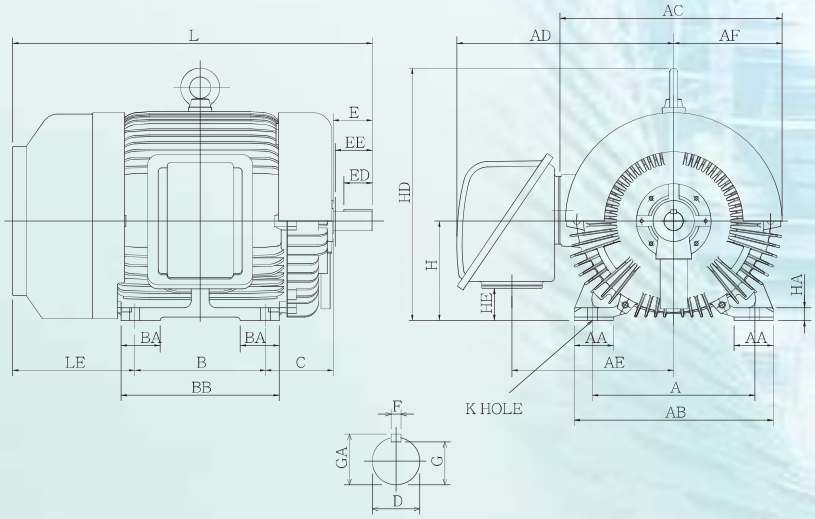

FIG7

Dimension in mm

Output (HP)			Frame Size	FIG NO.	A	AA	AB	AC	AD	AE	AF	B	BA	BB	C	EE	H
2P	4P	6P															
*150	-	-	280S	7	457	110	560	625	610	455	305	368	110	445	190	104	280
-	150	125	280S		457	110	560	625	610	455	305	368	110	445	190	157	280
*175	-	-	280M		457	110	560	625	610	455	305	368	110	445	190	104	280
-	175	150	280M		457	110	560	625	610	455	305	368	110	445	190	157	280
*215	-	-	315S		508	115	615	625	610	455	305	457	115	490	216	104	315
-	215	175	315S		508	115	615	625	610	455	305	457	115	490	216	157	315
-	-	215	315M		508	115	615	625	610	455	305	457	115	490	216	157	315

Frame Size	HA	HD	HE	K	L	LE	SHAFT EXTENSION						BEARING		APPROX. WEIGHT kgs
							D	E	ED	F	G	GA	DRIVE END	OPPOSITE DRIVE END	
280S	36	710	91	ϕ24	1012	344	55	110	80	16	49	59	6314C3	6314C3	680
280S	36	710	91	ϕ24	1072	344	85	170	140	22	76	90	*6320 NU320	6314	760/740
280M	36	710	91	ϕ24	1012	343	55	110	80	16	49	59	6314C3	6314C3	725
280M	36	710	91	ϕ24	1072	343	85	170	140	22	76	90	*6320 NU320	6314	810/820
315S	40	743	126	ϕ28	1001	369	55	110	80	16	49	59	6314C3	6314C3	840
315S	40	743	126	ϕ28	1162	369	95	170	140	25	86	100	*6320 NU320	6316	970/960
315M	40	743	126	ϕ28	1212	369	95	170	140	25	86	100	*6320 NU320	6316	1090

Note：1. Tolerance of Shaft End Diameter : m6。

2. Tolerance of Shaft Center Height :+0 , -1。

3. Usable Shaft Length:EE

4. *For Direct Flexible Coupling.

Dimension - AEUM

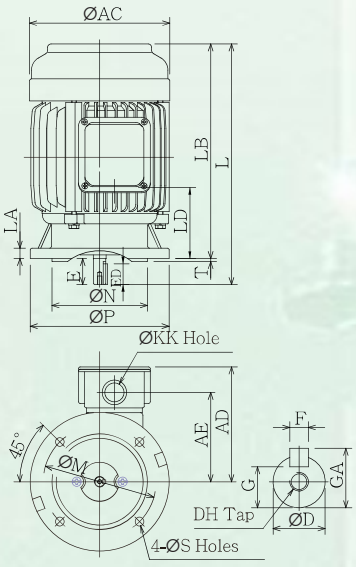

FIG8

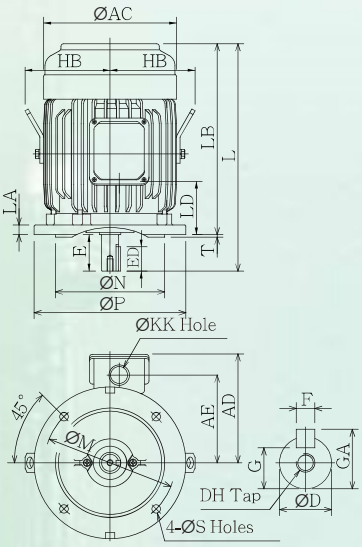

FIG9

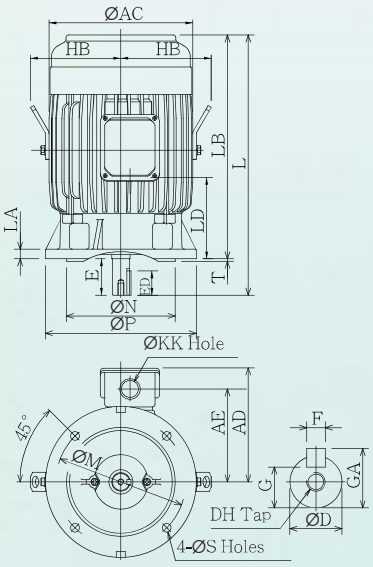

FIG10

Dimension in mm

Output (HP)			Frame Size	FIG NO.	AC	AD	AE	HB	KK	L	LA	LB	LD	M	N	P	S	T
2P	4P	6P																
0.25	0.25	—	63	8	144	123	93	—	ϕ22	248.0	12	225.0	74	130	110	160	10.0	3.5
0.5	0.5	—	71		162	133	103	—	ϕ22	277.5	12	247.5	82	130	110	160	10.0	3.5
1	1	0.5	80	9	177	144	112	—	ϕ22	282.0	12	242.0	60	165	130	200	12.0	3.5
2 3	2	1	90L	10	200	157	125	—	ϕ22	371.5	12	321.5	113	165	130	200	12.0	3.5
—	3	2	100L	9	219	180	145	140	ϕ28	374.5	16	314.5	88	215	180	250	14.5	4.0
5	5	3	112M	10	238	189	154	150	ϕ28	431.0	16	371.0	135	215	180	250	14.5	4.0
7.5 10	7.5	5	132S	9	273	224	180	169	ϕ35	454.0	20	374.0	97	265	230	300	14.5	4.0
—	10	7.5	132M		273	224	180	169	ϕ35	492.0	20	412.0	116	265	230	300	14.5	4.0

Frame Size	SHAFT EXTENSION							BEARING		APPROX. WEIGHT kgs
	D	E	ED	F	G	GA	DH	DRIVE END	OPPOSITE DRIVE END	
63	11	23	10	4	8.5	12.5	M4×8	6201ZZ	6201ZZ	9.5
71	14	30	14	5	11.0	16.0	M5×10	6202ZZ	6202ZZ	12.5
80	19	40	25	6	15.5	21.5	M6×12	6204ZZ	6204ZZ	19.5
90L	24	50	32	8	20.0	27.0	M8×16	6205ZZ	6205ZZ	27.0
100L	28	60	40	8	24.0	31.0	M10×20	6206ZZ	6305ZZ	43.0
112M	28	60	40	8	24.0	31.0	M10×20	6306ZZ	6306ZZ	51.0
132S	38	80	64	10	33.0	41.0	M12×24	6308ZZ	6306ZZ	73.0
132M	38	80	64	10	33.0	41.0	M12×24	6308ZZ	6306ZZ	84.0

Note：1. Tolerance of Shaft End Diameter : ϕ11~ϕ28：j6, ϕ38：k6。

2. Tolerance of N：h7。

Dimension - AEUM

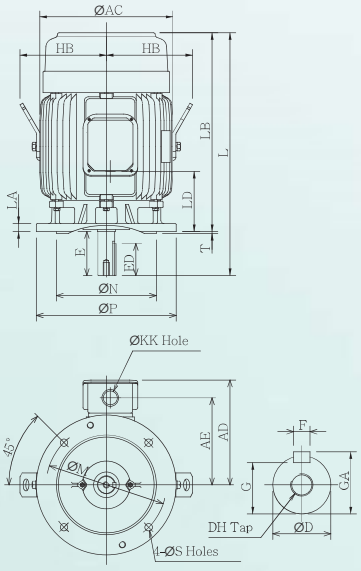

FIG11

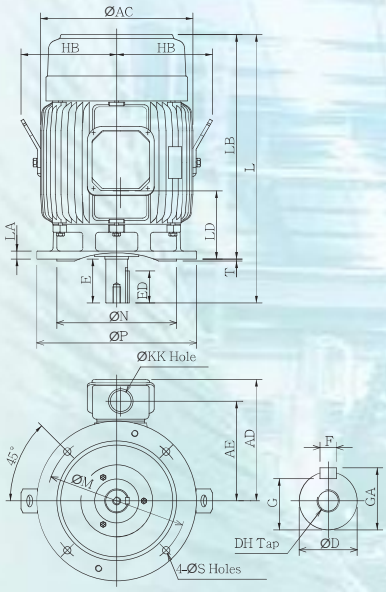

FIG12

Dimension in mm

Output (HP)			Frame Size	FIG NO.	AC	AD	AE	HB	KK	L	LA	LB	LD	M	N	P	S	T
2P	4P	6P																
15 20	15	10	160M	11	334	263	218	217	ϕ35	608	20	498	151.0	300	250	350	18.5	5
25	20	15	160L		334	263	218	217	ϕ35	652	20	542	173.0	300	250	350	18.5	5
30	—	—	180MA	12	382	305	250	241	ϕ52	672	20	562	170.5	350	300	400	18.5	5
—	25 30	20	180MC		382	305	250	241	ϕ52	672	20	562	170.5	350	300	400	18.5	5
40	—	—	180LA		382	305	250	241	ϕ52	710	20	600	189.5	350	300	400	18.5	5
—	40	25 30	180LC		382	305	250	241	ϕ52	710	20	600	189.5	350	300	400	18.5	5

Frame Size	SHAFT EXTENSION							BEARING		APPROX. WEIGHT kgs
	D	E	ED	F	G	GA	DH	DRIVE END	OPPOSITE DRIVE END	
160M	42	110	80	12	37.0	45.0	M16×32	6309ZZ	6307ZZ	133
160L	42	110	80	12	37.0	45.0	M16×32	6309ZZ	6307ZZ	148
180MA	48	110	80	14	42.5	51.5	M16×32	6311ZZC3	6310ZZC3	190
180MC	48	110	80	14	42.5	51.5	M16×32	6311ZZ	6310ZZ	206
180LA	55	110	80	16	49.0	59.0	M20×40	6312ZZC3	6310ZZC3	206
180LC	55	110	80	16	49.0	59.0	M20×40	6312ZZ	6310ZZ	233

Note：1. Tolerance of Shaft End Diameter：ϕ42~ϕ48：k6, ϕ55~ϕ65：m6。

2. Tolerance of N：h7。

Dimension - AEUM

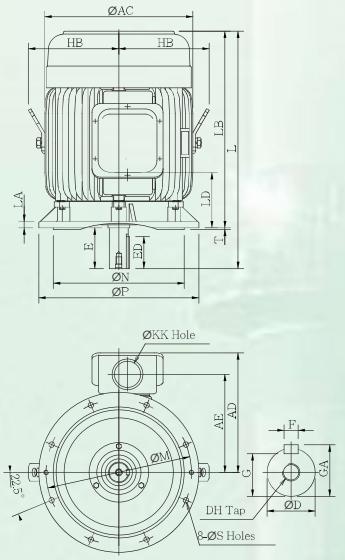

FIG13

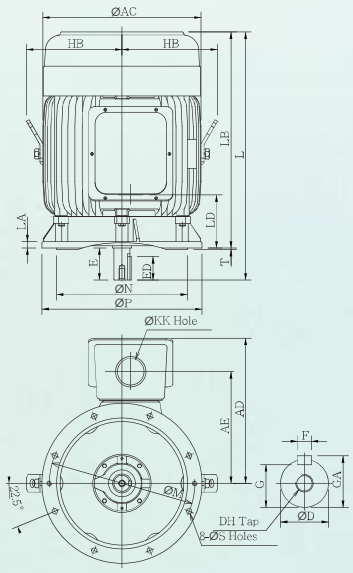

FIG14

Dimension in mm

Output (HP)			Frame Size	FIG NO.	AC	AD	AE	HB	KK	L	LA	LB	LD	M	N	P	S	T
2P	4P	6P																
50 60	—	—	200LA	13	458	362	299	286.0	φ65	774.5	20	664.5	194.5	400	350	450	18.5	5
—	50 60	40 50	200LC		458	362	299	286.0	φ65	804.5	20	664.5	194.5	400	350	450	18.5	5
75	—	—	225SA		510	411	337	312.0	φ92	786.0	22	676.0	190.0	500	450	550	18.5	5
—	75	60	225SC		510	411	337	312.0	φ92	816.0	22	676.0	190.0	500	450	550	18.5	5
100	—	—	250SA	14	545	499	384	329.5	φ92	882.5	22	742.5	182.5	500	450	550	18.5	5
—	100	75	250SC		545	499	384	329.5	φ92	882.5	22	742.5	182.5	500	450	550	18.5	5
125	—	—	250MA		545	499	384	329.5	φ92	890.5	22	780.5	201.5	500	450	550	18.5	5
—	125	100	250MC		545	499	384	329.5	φ92	920.5	22	780.5	201.5	500	450	550	18.5	5

Frame Size	SHAFT EXTENSION							BEARING		APPROX. WEIGHT kgs
	D	E	ED	F	G	GA	DH	DRIVE END	OPPOSITE DRIVE END	
200LA	55	110	80	16	49.0	59.0	M20×40	6312ZZC3	6212ZZC3	352
200LC	60	140	110	18	53.0	64.0	M20×40	6314ZZ	6212ZZ	372
225SA	55	110	80	16	49.0	59.0	M20×40	6312ZZC3	6212ZZC3	465
225SC	65	140	110	18	58.0	69.0	M20×40	6315ZZ	6213ZZ	480
250SA	55	110	80	16	49.0	59.0	M20×40	6313C3	6313C3	469
250SC	75	140	110	20	67.5	79.5	M20×40	NU316	6313	528
250MA	55	110	80	16	49.0	59.0	M20×40	6313C3	6313C3	537
250MC	75	140	110	20	67.5	79.5	M20×40	NU316	6313	595

Note：1. Tolerance of Shaft End Diameter：φ55~φ75：m6。

2. Tolerance of N：h7。

AEUM

Dimension - AEUM

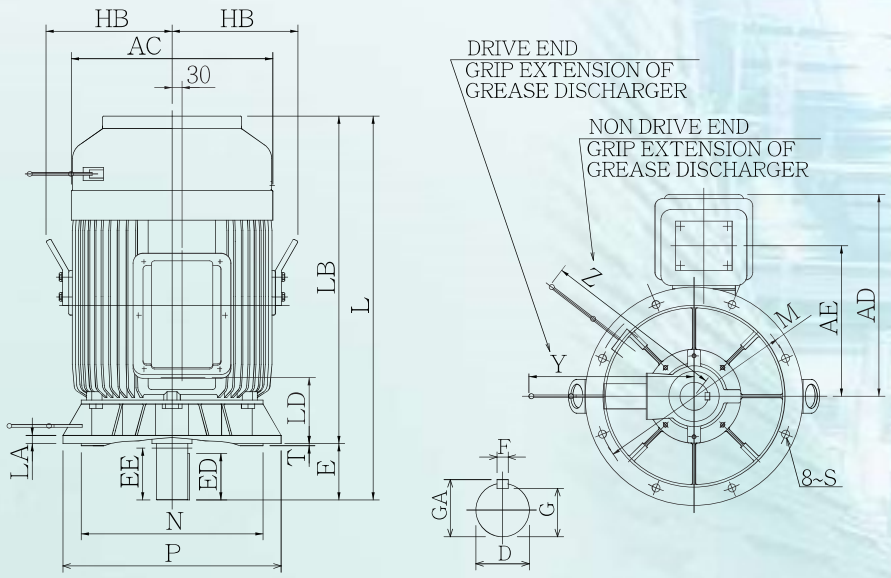

FIG15

Dimension in mm

Output (HP)			Frame Size	FIG NO.	AC	AD	AE	EE	HB	L	LA	LB	LD	M	N	P	S	T
2P	4P	6P																
*150	-	-	280S	15	610	610	455	104	383	1012	25	902	156	600	550	660	24	6
-	150	125	280S		610	610	455	157	383	1072	25	902	156	600	550	660	24	6
*175	-	-	280M		610	610	455	104	383	1101	25	991	200	600	550	660	24	6
-	175	150	280M		610	610	455	157	383	1161	25	991	200	600	550	660	24	6
*215	-	-	315S		610	610	455	104	383	1101	25	991	200	600	550	660	24	6
-	215	175	315S		610	610	455	157	383	1161	25	991	200	600	550	660	24	6
270	270	215	315M		610	610	455	157	383	1212	25	1042	226	600	550	660	24	6

Frame Size	Y	Z	SHAFT EXTENSION						BEARING		APPROX. WEIGHT kgs
			D	E	ED	F	G	GA	DRIVE END	OPPOSITE DRIVE END	
280S	585	585	55	110	80	16	49	59	6314C3	6314C3	740
280S	560	535	85	170	140	22	76	90	*6320 NU320	6316	810/830
280M	585	585	55	110	80	16	49	59	6314C3	6314C3	790
280M	560	535	85	170	140	22	76	90	*6320 NU320	6316	890/900
315S	585	585	55	110	80	16	49	59	6314C3	6314C3	920
315S	560	535	95	170	140	22	86	100	*6320 NU320	6316	1060/1050
315M	560	535	95	170	140	22	86	100	*6320 NU320	6316	1190

Note：1. Tolerance of Shaft End Diameter : m6。

2. Tolerance of Shaft Center Height :+0 , -1。

3. Usable Shaft Length:EE

4. *For Direct Flexible Coupling.

AEHM

HEAD OFFICE
TECO Electric & Machinery Co., Ltd
1OF No,3-1 , Yuan Cyu st.
Nan-kang Taipei 115
Taiwan ROC
TEL: +886 2 6615 9111
www.teco.com.tw/fa

UNITED STATES
TECO-Westinghouse Motor Company
5100 N IH-35
Round Rock Texas 78681 USA
Tel: +1 512 225 4141
+1 800 451 8798
Fax: +1 512 244 5512
Toll Free: +1 800 451 8798
www.tecowestinghouse.com

CANADA
TECO-Westinghouse Motors Inc. (Canada)
18060-109 Avenue, Edmonton, Alberta
T5S 2K2 Canada
Tel: +1 (780) 444 8933
Fax: +1 (780) 486 4575
24 HR Emergency ph:
+1 (780) 994 8964
Toll Free: +1 800 661 4023
Fax Toll Free: +1 888 USE TWMI
E-mail: webm@twmi.com
www.twmi.com

NETHERLANDS
Teco Electric & Machinery B.V.
Riviun 3e Straat 17
2909 LH Capelle a/d IJssel
The Netherlands
Tel: +31 (0)10 266 6633
Fax: +31 (0) 10 202 6415
E-mail:enquiries@teco-group.eu
www.teco-group.eu

MIDDLE EAST
Teco Middle East Electric & Machinery Co., Ltd.
2nd Industrial City, Dammam
PO Box #708, Dammam 31421
Kingdom of Saudi Arabia
Tel: +966 3 812 3939
Fax: +966 3 812 4823
Email: sales@teco-me.com

IRAN, AZERBAIJAN & ARMENIA
ATLAS DIBA Engineering & Trade Co.
No.3, Fakouri St., South Kadj Ave.
Golha Sq., Fatemi, Tehran, Iran
Tel: +98 21 88 33 03 81-3
Fax: +98 21 88 33 03 84
Email : info@atlasdibaco.com
www.atlasdibaco.com

TURKEY
TECO Elektrik Turkey A.S.
Yesilkoy Mah. Ataturk Caddesi No:12/1
EGS Business Park; B1 Blok 3. Kat; Daire No:
173-174 34149 - Bakirkoy/ Istanbul TURKEY
Phone: +90 212 465 4540
Fax: +90 212 465 4599

SOUTH AFRICA
TECO Electric & Machinery Co. Ltd
E-mail: manish@teco.com.tw

AUSTRALIA
Teco Australia Pty Ltd.
335-337 Woodpark Road
Smithfield NSW 2164 Australia
Tel: +61 2 9765 8118
Fax: 61-2-9604-9330
E-mail: emd@teco.com.au
www.teco.com.au

NEW ZEALAND
Teco New Zealand Pty Ltd.
Unit 3, 477 Great South Road
Penrose Auckland New Zealand
Tel: +64 9 526 8480
Fax: 64 9-526-8484
E-mail: philr@teco.co.nz

JAPAN
Sankyo Co., Ltd.
26th fl. World Trading Center Bidg.
2-4-1 Hamamatsucho Minato-ku
Tokyo Japan 105-6126
Tel: +81 3 3435 9729
Fax: +81 3 3578 8381
E-mail: s.mabuchi@teco-japan.com
Website:www.teco-japan.com

SINGAPORE
Teco Electric & Machinery(PTE)Ltd.
18 chin Bee Drive
Singapore 619865
Tel: +65 6 265 4622
E-mail: ds@teco.com.sg
www.teco.com.sg

INDONESIA
P.T. Teco Multiguna Elektro
JL Bandengan Utara No. 83/1-2-3
Jakarta Utara-14440 Indonesia
Tel: +62 21 662 2201
Fax: 62-21-6697029

INDIA
TECO Electric & Machinery Co., Ltd.
New Delhi Office
Phone: 91-11-22314654
Mobile: 91-9873390999
Contact: Vijay Sankar
E-mail: vijay@teco.com.sg

MALAYSIA
Plo 52, Jalan Firma 2/1,
KawasanPerindustrianTebrau 1,
81100 Johor Bahru, Johor, Malaysia
Tel: (60) 7-3518862 / (60) 7-3548008
Fax: (60) 7-3546107
E-mail: sales@teco.com.my

THAILAND
Teco Electric & Machinery
(Thai) Co., Ltd.
128/1 SoiWatsrivareenoi
Moo 7 Bangna-Trad Road Km 18
BangchalongBangplee
Samuthprakarn 10540 Thailand
Tel: +662-3371311-20
Fax: +662-337-1630-1

CHINA
Shanghai TECO Electric & Machinery co,. Ltd
Room 325 Building No.6
Lane 1279 Zhongshan W. Rd.
Shanghai, P.R.C
Tel: +86 21 5116 8255
Fax: +86 21 6278 8761

Wuxi Teco Electric & Machinery Co., Ltd
No. 9 South of Changjiang Road,
New Zone, Wuxi
Jiangsu Province, P.R.C.
Tel: +86 510 8534 2005
Fax: +86 510 8534 2001
www.wuxiteco.com

Jiangxi Teco Electric & Machinery Co., Ltd
189 Dongyuan Rd. Hi-Tech Zone, Nanchang
Jiangxi Province, P.R.C.
Tel: +86 791 819 5999
Fax: +86 791 816 7730

SUZHOU TECO Electric & Machinery Co., Ltd
No.1 Changjiang W.Rd.
South-Dam Industrial Park,
Liuhe Town,Taicang City,
Suzhou,Jiangsu Province, P.R.C.
Tel: +86 512 5361 9901
Fax: +86 512 5396 1058

FUJIAN TECO PRECISION CO.,LTD
Xiayang, Jizhao, Zhanggang village,
Saiqi Economical & Development Zone,
Fuan, Fujian, P.R.C.
TEL: +86 593 633 0300
FAX: +86 593 633 0303

HONG KONG
TecosonIndustrail Development
(HK) Co., Ltd
Rm 3712 Hong Kong Plaza
186-191 Connaught Rd. West
Hong Kong
Tel: +852 2858 3220
E-mail: tecohkg@netvigator.com

VIETNAM
Teco (Vietnam) Electric & Machinery Co.,Ltd.
KON LONG Thanh,Huyen Long Thanh
Tinh Dong Nai. Vietnam

https://maybomteco.vn/
HP: 0352183679

PHILIPPINES
Taian(Subic) Electric, Inc.
Phase 1 Industrial Park Argonaut Highway corner
Braveheart St Subic Bay Freeport Zone -2222-
Philippines
Tel: +63-47-252-1668/252-1669
Fax:+63-47-252-3234
E-mail:ericlin@taiansubic.com

Trade One, Incorporated
No. 56 Aragon Street San Francisco
Del Monte 1100 Quezon City Metro Manila,
Philippines
Tel: (632) 371-3032
Fax: (632) 371-1175
www.tradeoneinc.com

JUN. '14/BA-16-04(EN)