TECO INDUCTION MOTORS

EXPLOSION-PROOF

UNDERWRITERS LABORATORIES INC. LISTED HAZARDOUS LOCATIONS

Class I: Group D
Class II: Groups E, F, & G
IEC Frames 90S-280M
3/4 HP through 150 HP

PREMIUM FEATURES

- Rugged Cast-Iron Construction
- Oversized Cast-Iron Conduit Box
- Oversized Vacuum Degassed Bearings
- Stainless Steel Nameplate and UL Dual Class Label
- Non-sparking Fan and Dust Slingers
- Low Temperature Rise
- Energy Efficient and High Power Factor

TECO PERFORMANCE DATA

Explosion-proof, Type AEEDXU
Class I-Group D and Class II-Groups E, F, G
NEMA Design B, Class B & F Insulation*
40°C Ambient Temperature, Continuous Duty,
1.0 Service Factor for Frames 90S-225M, 1.15 Service Factor for Frames 250S-280M,
(Other Voltages and Cycles are Available on Request)

(220V/3φ/60HZ)

HP	Full Load RPM	Frame No.	Full Load				Locked Rotor		Break-down Torque %FLT	Rotor GD² Kg-M²
			Torque Kg-M	Eff. %	P.F. %	Current Amps	Torque %FLT	Current Amps		
¾	1150	90S	0.47	71.0	58.5	3.54	175	26	275	0.014
1	1745	90S	0.43	76.5	72.0	3.55	275	31	300	0.011
	1160	90L	0.64	71.0	58.5	4.71	170	31	265	0.018
1½	3480	90S	0.32	80.0	84.5	4.34	175	42	250	0.008
	1735	90L	0.64	75.0	78.0	4.95	250	42	280	0.014
	1150	112S	0.96	73.0	79.0	5.09	165	42	250	0.034
2	3460	90L	0.43	79.5	90.5	5.44	170	52	240	0.011
	1715	90L	0.84	78.0	81.5	6.16	235	52	270	0.018
	1160	112M	1.27	78.0	75.5	6.65	160	52	240	0.051
3	3420	112S	0.64	77.5	92.0	8.24	160	67	230	0.021
	1755	112S	1.26	82.5	80.0	8.90	215	67	250	0.037
	1170	132S	1.87	80.5	72.5	10.1	155	67	230	0.061
5	3450	112M	1.05	82.5	92.5	12.8	150	96	215	0.040
	1175	112M	2.09	84.0	86.5	13.5	185	96	225	0.067
	1160	132M	3.14	84.0	78.5	14.8	150	96	215	0.156
7½	3470	132S	1.58	84.0	89.5	19.5	140	133	200	0.047
	1745	132S	3.13	86.0	88.0	19.4	175	133	215	0.117
	1165	160M	4.72	85.0	84.0	20.6	150	133	205	0.289
10	3470	132M	2.12	85.0	91.5	25.2	135	169	200	0.064
	1740	132M	4.20	85.5	90.5	25.3	165	169	200	0.161
	1170	160L	6.27	86.5	85.0	26.6	150	169	200	0.431
15	3530	160M	3.13	85.5	92.0	37.3	130	243	200	0.167
	1760	160M	6.27	88.0	90.0	37.1	160	243	200	0.329
	1165	180M	9.42	87.5	86.5	38.8	140	243	200	0.693
20	3520	160L	4.16	87.5	93.0	48.1	130	303	200	0.220
	1755	160L	8.31	88.5	90.5	48.9	150	303	200	0.414
	1175	180L	12.47	89.5	86.5	50.6	135	303	200	1.275
25	3520	180MA	5.26	88.5	91.5	60.4	130	382	200	0.270
	1760	180M	10.39	90.0	88.0	61.8	150	382	200	0.633
	1175	200M	15.51	89.5	84.0	65.1	135	382	200	1.470
30	3530	180LA	6.23	90.0	92.0	70.9	130	455	200	0.355
	1750	180L	12.47	90.5	90.0	72.1	150	455	200	0.777
	1170	200L	18.70	90.5	84.5	76.8	135	455	200	1.993
40	3550	200MA	8.45	88.5	90.0	98.3	125	606	200	0.507
	1760	200M	16.62	90.5	90.0	96.1	140	606	200	1.132
	1185	225S	24.93	91.0	85.0	101.2	135	606	200	2.635
50	3550	200LA	10.53	88.0	90.0	123.6	120	758	200	0.584
	1760	200L	20.64	91.5	90.0	118.9	140	758	200	1.343
	1180	225M	31.02	90.5	86.5	125.0	135	758	200	3.030
	875	250SC	41.50	92.4	80.0	133.0	150	758	220	4.700
60	3530	225SA	12.33	89.5	91.5	143.4	120	910	200	0.921
	1765	225S	24.79	92.0	87.5	145.9	140	910	200	1.824
	1170	250SC	37.20	93.0	84.0	151.0	150	909	220	4.200
	875	250MC	49.70	92.4	80.0	159.0	150	909	220	5.640
75	3540	225MA	15.37	89.5	93.0	176.4	105	1134	200	1.360
	1775	225M	31.02	92.5	87.0	182.5	140	1134	200	2.480
	1170	250MC	46.40	93.0	84.0	188.0	150	1135	220	4.980
	880	280SC	61.80	93.0	81.5	194.0	150	1135	220	9.500
100	3550	250MA	20.40	93.0	90.2	233.0	105	1515	220	1.720
	1770	250MC	40.90	93.0	88.5	238.0	150	1515	220	4.430
	1175	280SC	61.80	93.0	85.5	246.0	150	1515	220	8.830
	880	280MC	82.40	93.0	82.5	255.0	150	1515	220	10.800
125	3555	280SA	25.50	93.0	91.0	289.0	100	1897	220	2.870
	1775	280SC	51.10	93.6	88.5	295.0	140	1897	220	6.540
	1175	280MC	77.10	93.6	85.5	306.0	150	1897	220	11.000
150	3555	280MA	30.50	93.0	91.7	—	100	2270	220	3.400
	1775	280MC	61.20	93.6	88.5	—	140	2270	220	7.760

* Class B Insulation is standard for frames 90S-225M and Class F for frames 250S-280M

Note:

1. The above are typical values based on test.
2. Actual load & full voltage starting: According to ANSI/IEEE standard 112-1978 method B
3. 150HP is for 380V & above only.
4. Data subject to change without notice.

TECO DIMENSIONS

Explosion-Proof Totally-Enclosed Fan-Cooled Horizontal Fo

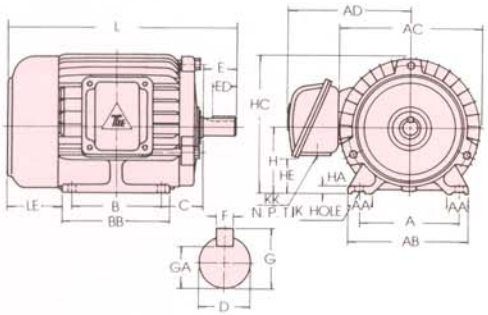

Fig-1

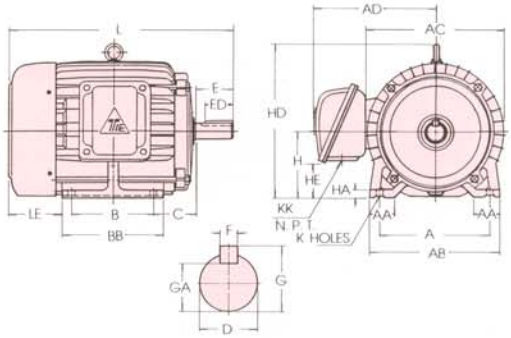

Fig-2

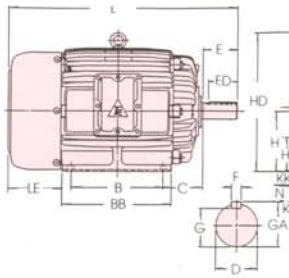

Fig-3

Output (HP)				Frame Nos. (EX)	Fig. No.	A	AA	AB	AC	AD	AE	B	BA	BB	C	H
2P	4P	6P	8P													
1½	1	¾	—	90S	1	140	35.5	170	200	204	145	100	—	130	56	90
2	1½, 2	1	—	90L		140	35.5	170	200	204	145	125	—	150	56	90
3	3	1½	—	112S	2	190	45.0	224	238	223	164	114	—	150	70	112
5	5	2	—	112M		190	45.0	224	238	223	164	140	—	175	70	112
7½	7½	3	—	132S		216	45.0	250	273	273	189	140	—	175	89	132
10	10	5	—	132M		216	45.0	250	273	273	189	178	—	212	89	132
15	15	7½	—	160M	3	254	50	300	334	311	227	210	—	250	108	160
20	20	10	—	160L		254	50	300	334	311	227	254	—	300	108	160
25	—	—	—	180MA	4	279	75	355	382	336	252	241	—	297	121	180
—	25	15	—	180MC	3	279	75	355	382	336	252	241	—	297	121	180
30	—	—	—	180LA	4	279	75	355	382	336	252	279	—	335	121	180
—	30	20	—	180LC	3	279	75	355	382	336	252	279	—	335	121	180
40	—	—	—	200MA	4	318	80	355	420	405	297	267	—	325	133	200
—	40	25	—	200MC		318	80	400	420	405	297	267	—	325	133	200
50	—	—	—	200LA		318	80	400	420	405	297	305	—	365	133	200
—	50	30	—	200LC		318	80	400	420	405	297	305	—	365	133	200
60	—	—	—	225SA		356	90	450	458	425	317	286	—	375	149	225
—	60	40	—	225SC		356	90	450	458	425	317	286	—	375	149	225
75	—	—	—	225MA		356	90	450	458	425	317	311	—	375	149	225
—	75	50	—	225MC		356	90	450	458	425	317	311	—	375	149	225
—	—	60	50	250SC	5	406	100	500	523	520	392	311	95	385	168	250
100	—	—	—	250MA		406	100	500	523	520	392	349	95	425	168	250
—	100	75	60	250MC		406	100	500	523	520	392	349	95	425	168	250
125	—	—	—	280SA		457	110	560	584	550	422	368	110	445	190	280
—	125	100	75	280SC		457	110	560	584	550	422	368	110	445	190	280
150	—	—	—	280MA		457	110	560	584	550	422	419	110	495	190	280
—	150	125	100	280MC		457	110	560	584	550	422	419	110	495	190	280

Note:

1. Tolerance of shaft end diameter D: Under ϕ28J6, ϕ38-ϕ48:K6, Above ϕ55:m6.
2. Tolerance of shaft center height H: Under 250: +0, −0.5 Above 280: +0, −1.
3. Cable hole KK in N.P.T. threaded dimension in inches.

t-Mounted, Type AEEDXU

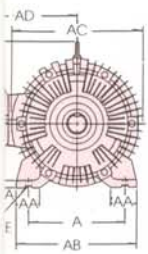

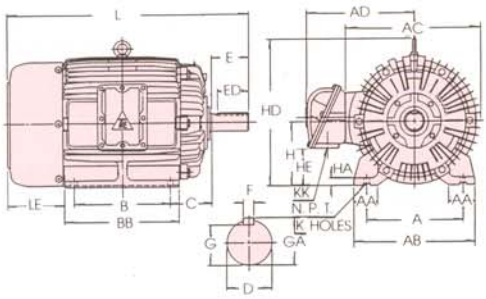

Fig-4

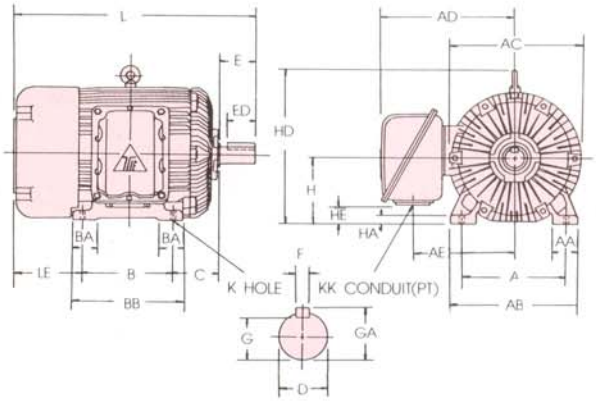

Fig-5

Dimensions in mm

	HC	HD	HE	K	KK	L	LE	Shaft Extension						Bearings		Approx. Weight KGS
								D	E	ED	F	G	GA	Drive End	Opposite Drive End	
	192	—	35	10	0.75″	299.0	93.0	24	50	32	8	20.0	27.0	6205ZZ	6205ZZ	29
	192	—	35	10	0.75″	324.0	93.0	24	50	32	8	20.0	27.0	6205ZZ	6205ZZ	32
	—	264	57	12	0.75″	355.5	111.5	28	60	40	8	24.0	31.0	6306ZZ	6306ZZ	44
	—	264	57	12	0.75″	381.5	111.5	28	60	40	8	24.0	31.0	6306ZZ	6306ZZ	52
	—	311	48	12	1″	446.0	137.0	38	80	58	10	33.0	41.0	6308ZZ	6306ZZ	85
	—	311	48	12	1″	484.0	137.0	38	80	56	10	33.0	41.0	6308ZZ	6306ZZ	97
	—	377	73	15	1.25″	604.5	176.5	42	110	80	12	37.0	45.0	6309ZZ	6307ZZ	143
	—	377	73	15	1.25″	648.5	176.5	42	110	80	12	37.0	45.0	6309ZZ	6307ZZ	165
		421	93	15	1.5″	667.0	195.0	48	110	80	14	342.5	51.5	6211C3	6211C3	210
	—	421	93	15	1.5″	667.0	195.0	48	110	80	14	42.5	51.5	6311ZZ	6310ZZ	217
	—	421	93	15	1.5″	705.0	195.0	48	110	80	14	42.5	51.5	6211C3	6211C3	237
	—	421	93	15	1.5″	705.0	195.0	48	110	80	14	42.5	51.5	6311ZZ	6310ZZ	243
	—	469	81	19	2″	730.0	220.0	55	110	80	14	49.0	59.0	6312C3	6211C3	310
	—	469	81	19	2″	730.0	220.0	55	110	80	16	49.0	59.0	6312	6310ZZ	330
	—	469	81	19	2″	768.0	220.0	55	110	80	16	49.0	59.0	6312C3	6212C3	335
	—	469	81	19	2″	768.0	220.0	55	110	80	16	49.0	59.0	6312	6212	365
	—	524	115	19	3″	806.0	261.0	55	110	80	16	49.0	59.0	6312C3	6212C3	405
	—	524	115	19	3″	836.0	261.0	60	140	110	18	53.0	64.0	6313	6213	415
	—	524	115	19	3″	806.0	236.0	55	110	80	16	49.0	59.0	6312C3	6212C3	435
	—	524	115	19	3″	836.0	236.0	60	140	110	18	53.0	64.0	6313	6213	445
	—	581	106	24	4″	888.0	269.0	75	140	110	20	67.5	79.5	6317	6313	580
	—	581	106	24	4″	896.0	269.0	55	110	80	16	49.0	59.0	6313C3	6313C3	630
	—	581	106	24	4″	926.0	269.0	75	140	110	20	67.5	79.5	6317	6313	670
	—	660	131	24	4″	991.0	293.0	60	140	110	18	53.0	64.0	6313C3	6313C3	800
	—	660	131	24	4″	1021.0	293.0	85	170	140	22	76.0	90.0	NU318	6318	850
	—	660	131	24	4″	1042.0	293.0	60	140	110	18	53.0	64.0	6313C3	6318C3	870
	—	660	131	24	4″	1072.0	293.0	85	170	140	22	76.0	90.0	NU318	6318	920

TECO PERFORMANCE DATA

Explosion-proof, Type AEEDXU
Class I-Group D and Class II-Groups E, F, G
NEMA Design B, Class B & F Insulation*
40°C Ambient Temperature, Continuous Duty, 1.0 Service Factor
(Other Voltages and Cycles are Available on Request)

(400V/3ϕ/50Hz)

HP	Full Load RPM	Frame No.	Full Load				Locked Rotor		Break-down Torque %FLT	Rotor GD² Kg-M²
			Torque Kg-M	Eff. %	P.F. %	Current Amps	Torque %FLT	Current Amps		
¾	950	90S	0.57	68.0	58.5	2.03	175	19	275	0.014
1	1440	90S	0.51	75.5	71.5	1.99	275	19	300	0.011
	950	90L	0.76	68.0	58.5	2.71	170	19	265	0.018
1½	2870	90S	0.39	79.0	84.5	2.42	175	26	250	0.008
	1425	90L	0.76	72.5	76.0	2.93	250	26	280	0.014
	950	112S	1.15	75.0	79.0	2.73	165	26	250	0.034
2	2850	90L	0.51	78.5	90.0	3.05	170	32	240	0.011
	1425	90L	1.01	75.0	80.5	3.57	235	32	270	0.018
	965	112M	1.52	78.0	72.5	3.81	160	32	240	0.051
3	2850	112S	0.76	79.0	92.0	4.44	160	41	230	0.021
	1450	112S	1.52	81.0	79.5	5.02	215	41	250	0.037
	965	132S	2.24	80.0	71.0	5.69	155	41	230	0.061
5	2850	112M	1.26	82.5	92.5	7.05	150	58	215	0.040
	1440	112M	2.51	82.5	82.0	7.96	185	58	225	0.067
	950	132M	3.77	82.0	78.5	8.36	150	58	215	0.156
7½	2900	132S	1.90	85.5	88.0	10.7	140	80	200	0.047
	1450	132S	3.75	85.5	87.5	10.8	175	80	215	0.117
	965	160M	5.66	85.0	84.0	11.3	150	80	205	0.289
10	2880	132M	2.55	86.5	91.5	13.6	135	102	200	0.064
	1440	132M	5.04	86.0	89.0	14.1	165	102	200	0.161
	965	160L	7.53	86.5	85.0	14.6	150	102	200	0.431
15	2925	160M	3.75	88.5	92.0	19.8	130	146	200	0.167
	1460	160M	7.53	88.0	90.0	20.4	160	146	200	0.329
	965	180M	11.30	86.0	86.5	21.7	140	146	200	0.693
20	2920	160L	4.99	88.5	93.0	26.2	130	184	200	0.220
	1460	160L	9.97	88.5	90.5	26.9	150	184	200	0.414
	970	180L	14.96	88.0	86.5	28.3	135	184	200	1.275
25	2925	180MA	6.32	89.0	90.5	33.4	130	231	200	0.270
	1460	180M	12.47	90.0	87.0	34.4	150	231	200	0.633
	970	200M	18.61	89.0	84.0	36.0	135	231	200	1.470
30	2940	180LA	7.48	90.5	91.0	39.2	130	275	200	0.355
	1460	180L	14.96	90.5	90.0	39.7	150	275	200	0.777
	975	200L	22.44	89.5	84.5	42.7	135	275	200	1.993
40	2960	200MA	10.14	89.5	88.5	54.4	125	368	200	0.507
	1465	200M	19.94	91.0	90.0	52.6	140	368	200	1.132
	980	225S	29.92	91.0	83.0	57.0	135	368	200	2.635
50	2955	200LA	12.63	90.0	90.0	66.5	120	458	200	0.584
	1465	200L	24.76	91.0	90.0	65.7	140	458	200	1.343
	980	225M	37.23	91.5	86.5	68.0	135	458	200	3.030
	725	250MC	50.10	91.7	78.5	74.8	150	458	200	5.170
60	2960	225SA	14.79	90.5	91.0	78.4	120	549	200	0.921
	1465	225S	29.75	91.5	86.0	82.1	140	549	200	1.824
	980	250SC	44.50	93.0	82.5	84.2	150	549	200	4.620
	725	280SC	60.10	91.7	78.5	89.7	150	549	200	9.470
75	2960	225MA	18.45	91.5	91.0	97.0	105	686	200	1.360
	1465	225M	37.23	92.5	85.5	102.1	140	686	200	2.483
	980	250MC	55.60	93.0	82.5	105	150	686	220	5.540
	725	280MC	75.20	92.4	80.0	109	150	686	200	11.400
100	2955	250MA	24.60	93.0	89.5	129	105	917	220	1.720
	1480	250MC	49.10	93.0	87.5	132	125	917	220	4.440
	985	280SC	73.80	93.0	84.0	138	125	917	220	8.840
125	2955	280SA	30.70	93.0	90.2	160	100	1147	220	2.870
	1475	280SC	61.60	93.6	87.5	164	140	1147	220	6.540
	985	280MC	92.20	93.6	84.0	171	125	1147	220	11.100
150	2960	280MA	36.80	93.0	91.0	191	100	1370	220	3.400
	1476	280MC	73.90	93.6	87.5	197	140	1370	220	8.240

* Class B Insulation is standard for frames 90S-225M and Class F for frames 250S-280M

Note:

1. The above are typical values based on test.
2. Actual load & full voltage starting: According to ANSI/IEEE standard 112-1978 method B
3. 150HP is for 380V & above only.
4. Data subject to change without notice.

TECO IS HERE TO SAVE AND LAST

Typical Construction and Features, Type AEEDXU

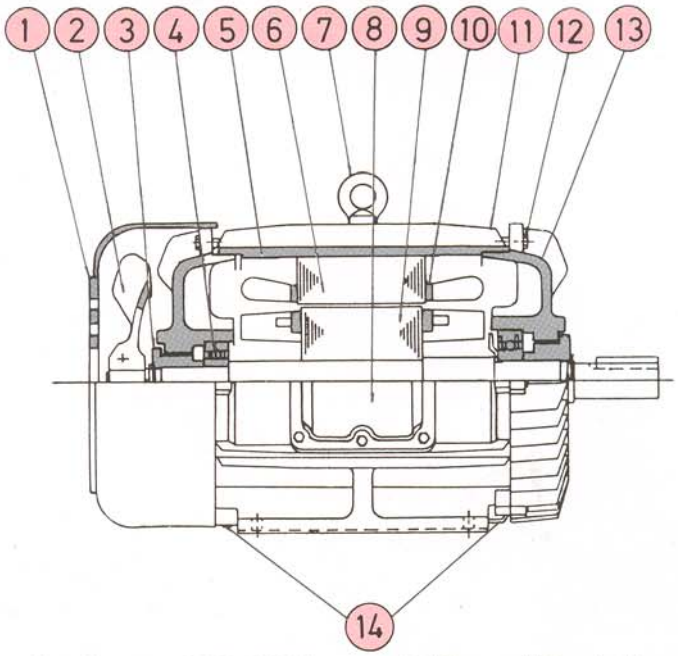

① Pressed Steel Fan Cover For Frames 90S-225M
Cast Iron Fan Cover For Frames 250S-280M
② Non-sparking External Fan
③ Non-sparking Dust Flinger
④ Oversized Bearings
⑤ Cast-Iron Frame
⑥ Copper Winding and Electromagnetic Steel Laminations
⑦ Forged Eye-bolt
⑧ Oversized Cast Iron Conduit Box
⑨ Dynamically Balanced Die-cast Rotor
⑩ Improved Non-hydroscopic Insulation
⑪ Efficient Close-High-Fins Design
⑫ Zn-C Plated Hardware
⑬ Cast Iron Endbells
⑭ Stainless Breather and Drains

Hazardous Locations Listed by UL

Class	Group	Explosive Environment
I	D	Atmospheres Containing gasoline, hexane, naphtha, benzine, butane, propane, alcohols, acetone, benzol, lacquer solvent vapors, or natural gas.
II	E	Atmospheres containing dusts of aluminum, magnesium, or their commercial alloys.
	F	Atmospheres containing carbon black, coal, or coke dust.
	G	Atmospheres containing flour, starch, or grain dust.

All motors comply with operating temperature code T2D for Group D and T3B for Group E.F.G.

TECO ELECTRIC & MACHINERY CO., LTD.
49,WU KUNG 6 RD., WU KU INDUSTRIAL DISTRICT,
TAIPEI HSIANG,TAIWAN, R.O.C.
PHONE:886-2-89901111
TELEFAX:886-2-22900465
Tel: 0906 674 168 Email : duylam127@gmail.com

JAN.'02/TA8032